Shell Structures

Shell structure design Bend & Break



16/10/2023

Course CT3280 Shell Roofs
Delft University, Department of Civil Engineering and Geosciences

Group 3
Anne Sophie Binnendijk
Aylin Mikkers
Koen de Rooij
Florian van den Berg

Preface

This report is written on behalf of the minor-course ‘Bend and Break Shell Structures'.
The members of the group are very grateful to Dr.ir. P.C.J. Hoogenboom for his lectures on shell structure analysis, as well as providing the building materials for the design. He also provided advice on the design throughout the process.

Summary

Shell structures are used to efficiently cover large areas. Aesthetic and effective shell structures have been built all over the world. However, while these structures showcase beauty and efficiency, there are particular requirements that need to be addressed. From determining the shape to selecting the materials.

For the course Shell Structures each group was assigned to design, analyse, build and test a shell roof model. To come up with a design two experiments were conducted in the lab. From these experiments it was concluded that the wooden slats were easily bendable using hot water. The design should feature a concrete cast on the outside outside of a shell and the design should avoid including four corners. Instead, a circular base should be used. A design featuring a wooden mesh grid shaping a concrete dome on top of it was opted for.

To analyse the shell and predict the load at which the shell might collapse, a finite element analysis is conducted using SCIA. From the simulations it followed that the shell structure could carry a load of 1128.44 *kg*, which was reduced by a factor of 5 due to the imperfect nature of the design's execution to 225.69 kg. During testing it was observed that the structure could, in fact, carry significantly more than the proposed 225.69 *kg*, as it still stood unfazed under a load of approximately 310 *kg*.

The point load test was used as a replacement for the distributed load test to lead the shell model to failure, when the distributed test proved ineffective. A prediction of the failure load was done at 218 *kg*. The shell finally failed at 234.6 *kg*, with a 'punch' failure mode.

After testing and analysing the results, it can be concluded that the real shell would be able to bear its required loads. The shell will not fail, and the deflection does not disturb the user. However, it can be concluded that the shell is overdesigned. The concrete layer is too thick. The real shell can be thinner, making it cheaper to produce.

Table of contents

Preface **2**
Summary **3**
1. Introduction **5**
2. Design **6**
2.1. The inspiration 6
2.2. Experiments 6
2.3. First design 8
2.4. Second design 9
3. Calculations **10**
3.1. Thickness determination 10
3.2. Failure prediction 11
3.3. Linear analysis 12
3.4. Linear buckling analysis 12
3.5. Nonlinear buckling analysis 14
4. Building process **15**
4.1. The base 15
4.2. The wood layer 15
4.3. The connecting layer 15
4.4. The concrete layer 15
5. Results **17**
5.1. Concrete cube testing 17
5.2. Distributed load test 17
5.3. Point load test 19
6. Discussion **21**
6.1. Design process 21
6.2. Production 21
6.3. Testing process 22
7. Conclusion **23**
7.1. Distributed load test 23
7.2. Point load test 23
Bibliography **24**

1. Introduction

Shell structures are structures that bear load very efficiently. The shape and size of shell structures can vary. Different variations have different advantages and disadvantages. The endless opportunities make shell structures an interesting research subject. In this report, different types of shell structures were researched, and a shell structure was designed and built. The following research question was answered:

Would the real shell be able to bear its required loads?

The first step to answering this question was doing research on existing shell structures, followed by testing the available materials in the lab. Based on the research and testing, a shell was designed. This process is described in Chapter 2. Next, Chapter 3 contains the calculations to determine some more specific features of the design such as dimensions, but also the projected load capacity. Chapter 4 encompasses the building process, where despite ample preparation, several challenges influenced the characteristics of the final product. Next, the results of testing can be found in Chapter 5. In Chapter 6, a conclusion on the performance of the design is presented and the research question is answered and subsequently reflected on in Chapter 7.

2. Design

This chapter shows the steps taken to reach a first design for the shell structure. The first idea is based on a type of wood structure often used for shells. Some experiments in the lab were used to refine this idea, leading to the creation of the first design.

2.1. The inspiration

The initial inspiration is a type of open wood shell with four corners to transfer the load to the floor. The direction of the wood layers differs between designs, but the shape remains consistent (see figure 2.1 & 2.2).



Figure 2.1: Inspiration (Taubman College of Architecture and Urban Planning, 2023)



Figure 2.2: Inspiration (Shell Structure Model Experimental, 2017)

2.2. Experiments

Two experiments were conducted in the lab: one for bending wood, and one for using concrete on a curved surface.

The first experiment showed that water with a temperature above +- 30 *°C* is sufficient to bend wood slats of dimensions 500x8x4 *mm* to a desired curvature (see figure 2.3). This inspired the use of wood slats to create the desired shape of the shell structure.



Figure 2.3: Wood slat, bent using lukewarm water

The second experiment showed two relevant properties of the used concrete mix: First, that concrete cast on the *inside* of a shell shows more issues with moisture collection than concrete cast on the *outside* of a shell (figure 2.4). Second, that the four corners of the structure where the forces are collected, are prone to brittle failure (figure 2.5).



Figure 2.4: Test shells with concrete cast on the inside & outside



Figure 2.5: Brittle failure at corners

This experiment therefore resulted in the following decisions:

- The design should feature concrete cast on the *outside* of a shell.
- The design should not feature four corners. Instead, it should have a circular base.

2.3. First design

Using components from both the inspiration and the conducted experiments, the first design shown in figure 2.6 was created. It features wood slats bent using warm water to create the shape of the shell, overlaid by a concrete layer that provides the structure its strength.

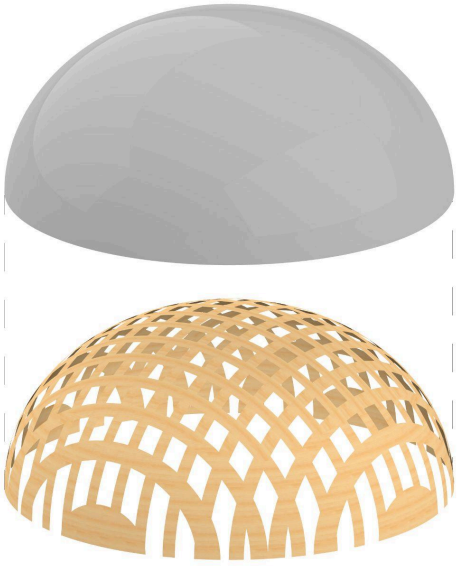

Figure 2.6: Shell structure design

For the design, the two experiments were combined. It features a concrete dome on top of a wooden mesh grid. Inspired by the second experiment, specifically the failure at the corners of the test structures, the wooden grid will not be supported by four legs, unlike the inspiration, but will be supported by a flat surface.The same applies to the concrete dome.

2.4. Second design

During the construction phase, the first design was adjusted. First, the height of the dome is lower than it was in the first design iteration. The height was changed because the slats that were used did not bend as easily as the slats that were used in the test. This gentler slope also makes the casting of the concrete easier.

Second, the original grid of the wooden slats was altered. The second layer of slats was removed. Instead, the dome shape was fixed using the mesh material. This proved to be easier because there is less added tension on the first layer of slats.

Last, there were two layers added for the concrete. A closed layer to make sure the concrete does not fall through, and a mesh layer to act as the rebars in the concrete.

The real dimensions of the structure are: 3 *m* tall at the highest point, radius of the edge is 8 *m*. The dimensions of the scale model are 20 times as small, so 0.15 *m* tall at the highest point, radius of the edge 0.4 *m*

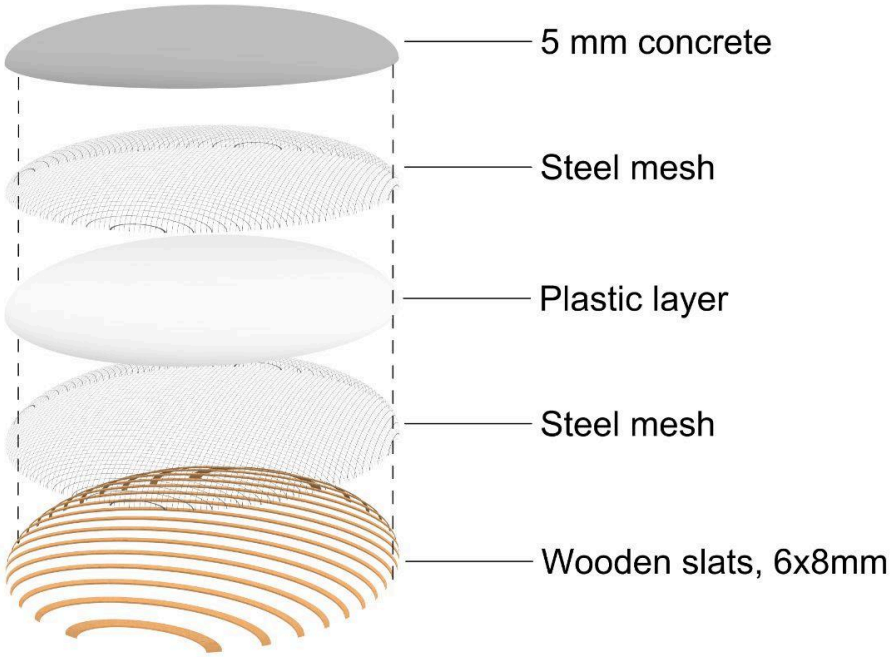

Figure 2.7: Second shell structure design

3. Calculations

This chapter shows the hand calculation to determine the dome thickness, as well as the mathematical analysis of the shell structure using FEM software, starting with a linear analysis, followed by a linear buckling analysis. Then, the failure load during testing will be predicted.

3.1. Thickness determination

To determine the required thickness of the dome, the structure is assumed to consist entirely of concrete. This is done to simplify the calculations, but also because the wood is not expected to carry much load. The location at which the highest stress occurs has to be determined first.
The stress in the top is:

$$\sigma = \frac{1}{2} * p * \frac{a}{t} = \frac{1}{2} * p * (\frac{1}{2} * s + \frac{1}{8} * \frac{l^2}{s})/t$$

,where
σ_{fail} = Stress at which homemade concrete fails in *N/mm²*
p = Distributed load in *N/mm²*
a = radius of curvature in *mm*
t = Shell thickness in *mm*
s = Sagitta (the height of an arch) in *mm*
l = Span in *mm*

Filling in the values gives:

$$5 = \frac{1}{2} * 0.004 * (\frac{1}{2} * 150 + \frac{1}{8} * \frac{800^2}{150})/t$$

This yields a shell thickness of 0.243 *mm*.

As a concrete thickness of 0.243 *mm* is not realistic, a larger thickness of 5 *mm* is selected. This is the thinnest possible layer of concrete that is constructible while still retaining the capacity of bearing load.

Mixture used:
cement 0.149 m^3/m^3 at 1440 kg/m^3
sand 0.299 m^3/m^3 at 1500 kg/m^3
coarse sand 0.448 m^3/m^3 at 1700 kg/m^3
water 0.104 m^3/m^3 at 1000 kg/m^3

Mixture density: 1529 kg/m^3
Mixture force: 15 kN/m^3 (g=9.81)
Selfweight of the structure is the mixture in kN/m^3 multiplied by the thickness of the real structure. The scale model thickness is 5 mm. The real structure is 20x the size of the real structure, so the real thickness would be 0.005 * 20 = 0.1 m.
Selfweight of structure: 15 kN/m^3 * 0.1 m = 1.5 kN/m^2

3.2. Failure prediction

To predict the failure load, first the strength of the concrete on the testing day must be determined. This is done using the information that the concrete was cast on 07/12/2023 and tested on 18/12/2023 and the formula for concrete strength:

$$f_{cm}(t) = exp\left\{s\left[1 - \left(\frac{28}{t}\right)^{0.5}\right]\right\} * f_{cm}(28)$$

, where:
s = 0.25 (N normal hardening cement)
t = 11 days
$f_{cm}(28)$ = 20 MPa (C12/15, lowest concrete strength due to lack of large aggregates and inconsistencies in mix)

$$f_{cm}(t) = exp\left\{0.25\left[1 - \left(\frac{28}{11}\right)^{0.5}\right]\right\} * 20 = 17.23\ MPa$$

Using Scia Engineer, the maximum load (kN/m^2) is determined that the scale model will be able to support. This means the input structure has the scale model dimensions (height 0.15 *m*, radius of edge 0.4 *m*, shell thickness 0.005 *m*).

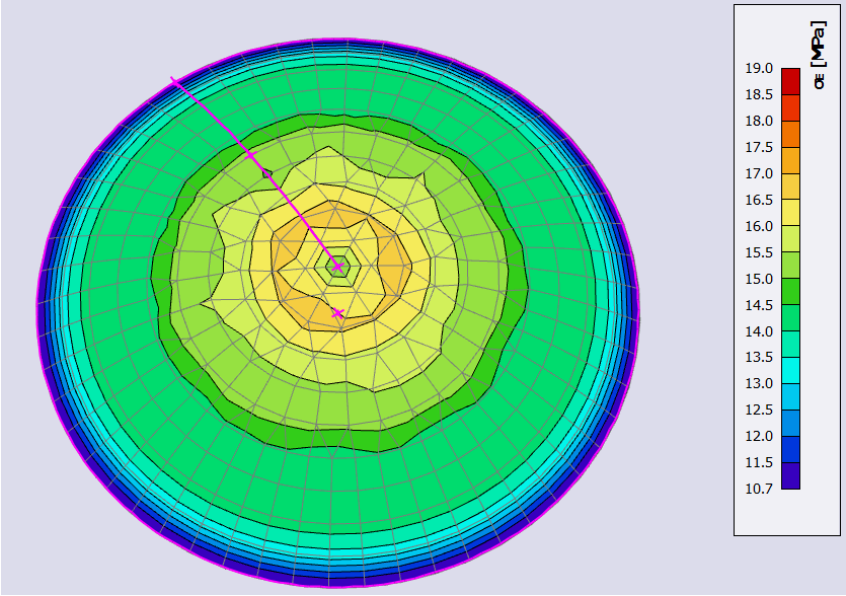

Figure 3.1: Predicted failure of scale model - at 17.23 MPa

The maximum stress is achieved with a load of 22 kN/m^2 on top of the selfweight of the structure. The area of the dome shape is 0.503 m^2, which means the maximum divided load the structure can support is 22 kN/m^2 * 0.503 m^2 = 11.07 kN.
This equals 1128.44 kg (g = 9.81).

A factor of 0.2 is used on this calculated load to account for imperfections in the material of the shell and the shape of the shell, as it is not manufactured by professionals and shell structures are highly impacted by imperfections of any kind. This gives a final prediction of 225.69 kg.

3.3. Linear analysis

The linear analysis of the structure was done in Scia Engineer using a load combination of snow (1 kN/m^2) and the selfweight of the real structure (1.5 kN/m^2). The size of the model structure was used (height 0.15 *m*, radius of edge 0.4 *m*, shell thickness 0.005 *m*).

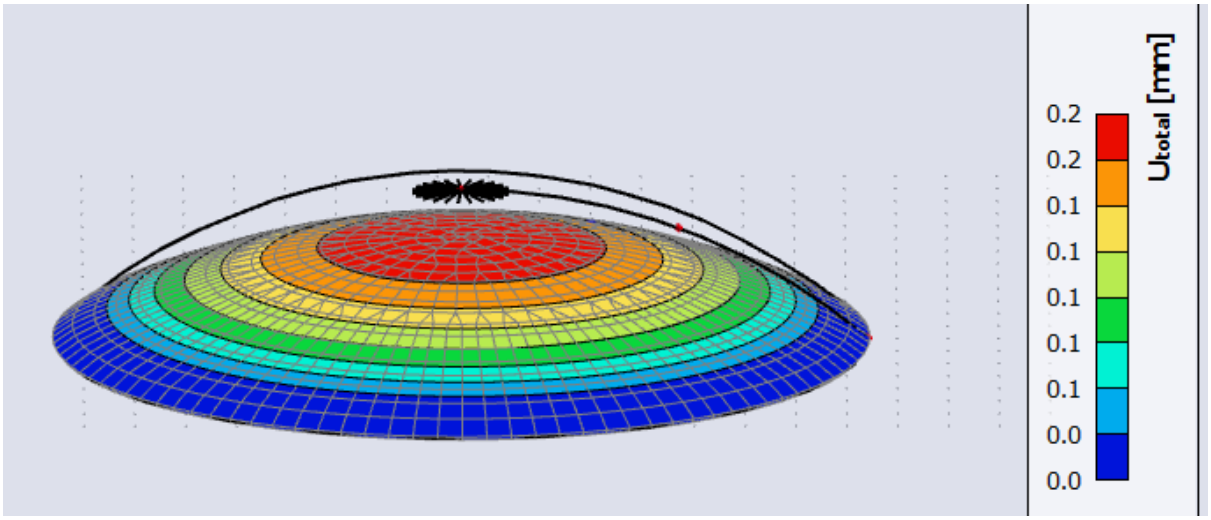

Figure 3.2: 3D linear analysis - deformations

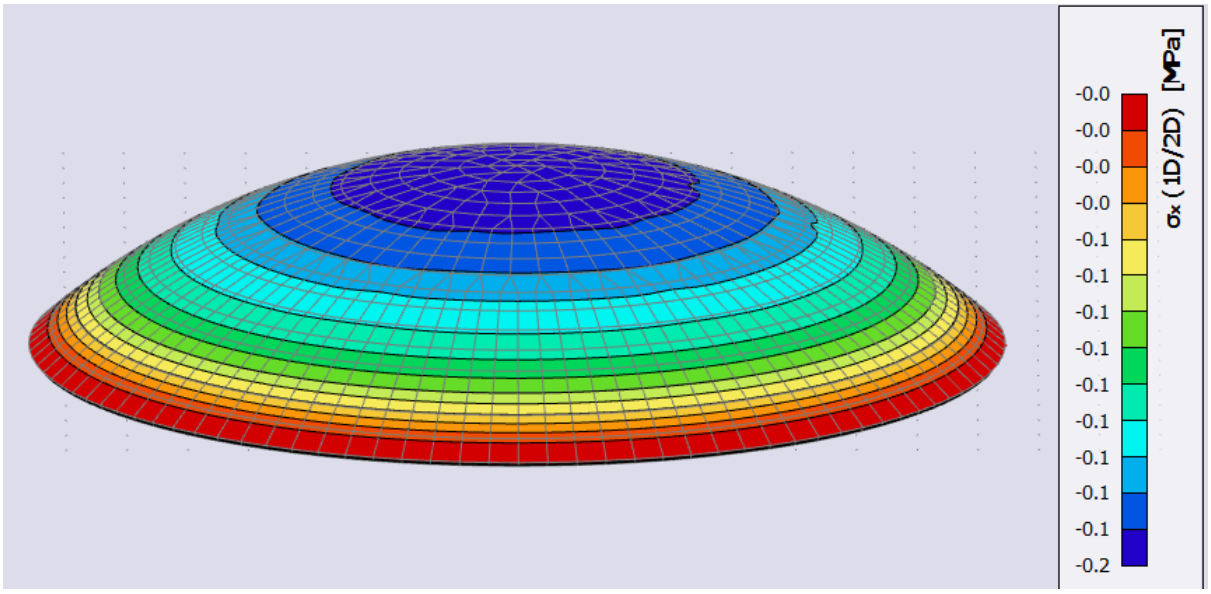

Figure 3.3: 3D linear analysis - stresses

The deformation of the structure is 0.2 *mm* for the model structure (figure 3.2). This would mean a deformation of 4 *mm* on the real structure, on a height of 3 *m*. This is an acceptable amount of deformation in terms of user comfort. The maximum stresses in the model structure are 0.2 *MPa* in the top of the dome (figure 3.3). This is an acceptable amount of stress when compared to the failure stress of 17.23 MPa.

3.4. Linear buckling analysis

The first and second buckling modes are determined using Scia Engineer with a load combination of snow (1 kN/m^2) and the selfweight of the real structure (1.5 kN/m^2). The

model size of the structure was used (height 0.15 *m*, radius of edge 0.4 *m*, shell thickness 0.005 *m*).

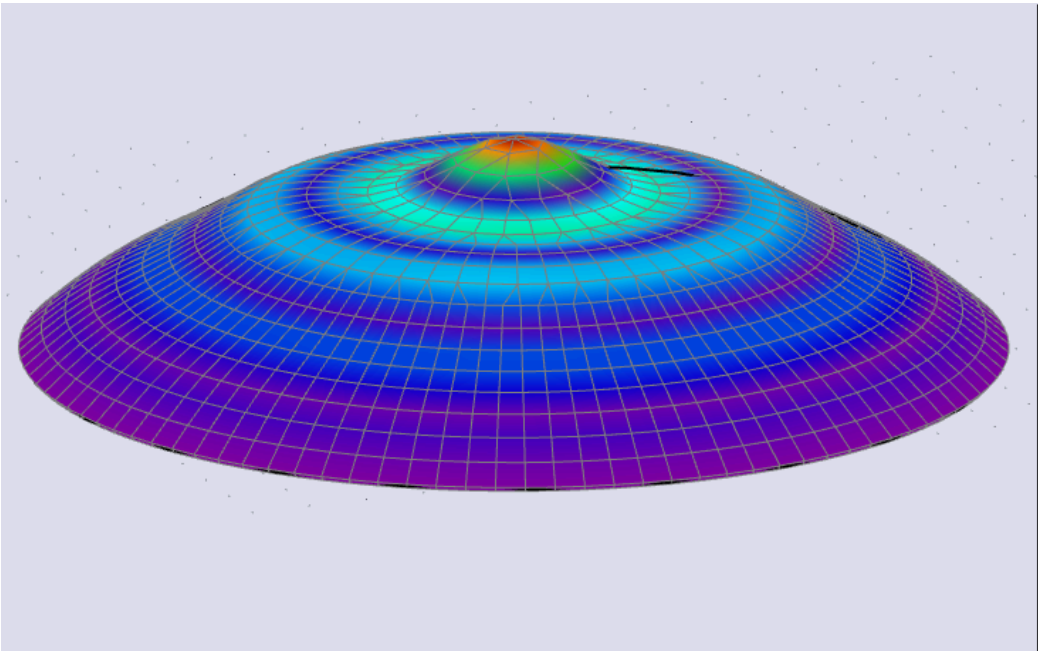

Figure 3.4: 3D linear buckling analysis - first buckling mode deformations (λ = 464.83)

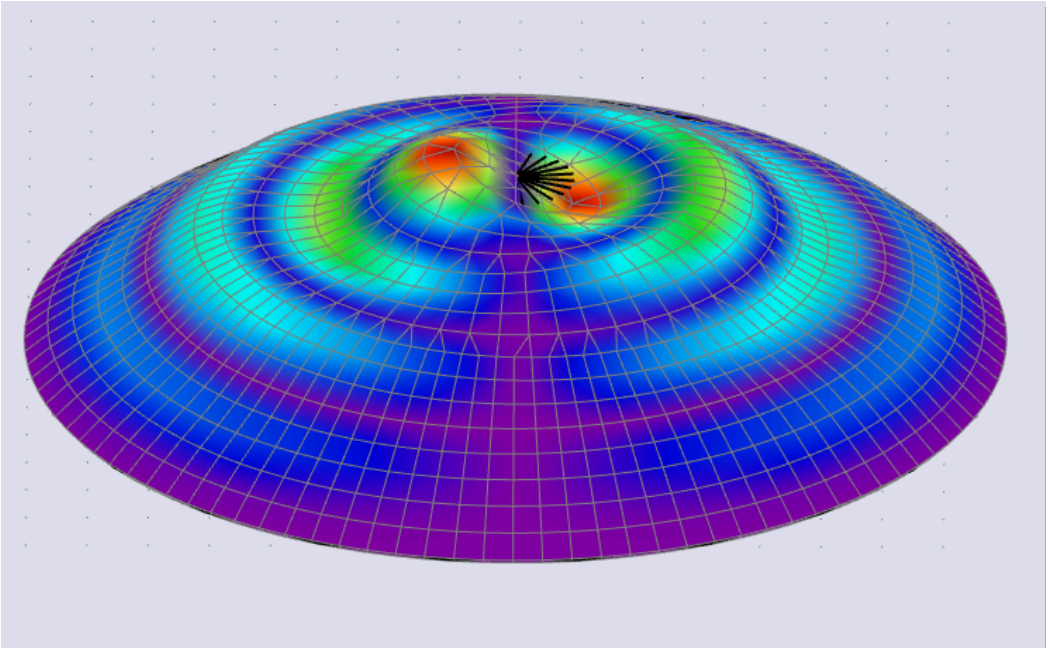

Figure 3.5: 3D linear buckling analysis - second buckling mode deformations (λ= 467.80)

The load for the first and second buckling modes (the most likely modes to occur) are around 465x larger than the exerted loads, or 2.5 * 465 = 1162.5 kN/m^2. The area of the dome shape is 0.503 m^2, which means the load over the area is 1162.5 kN/m^2 * 0.503 m^2 = 584.74 kN. Finally, a knockdown factor of ⅛ is used on this value, meaning the buckling load

becomes 584.74/6 = 97.46 kN or 9934.76 kg (g = 9.81). Bearing failure is 255.69 kg < 9934.76 kg. This means the structure will not fail due to buckling.

3.5. Nonlinear buckling analysis

The nonlinear buckling analysis was performed using a global imperfection of 3mm (figure 3.5 & 3.6). The loads on the model shell (snow load 1 kN/m^2 and selfweight of real structure 1.5 kN/m^2) were increased to 1000x their value for the first iteration. The analysis was possible until and including iteration 7/20. This means the predicted buckling load is 2.5 kN/m^2 * 1000 * 7/20 or 875 kN/m^2. The area of the dome shape is 0.503 m^2. This means the predicted buckling load over the area is 875 * 0.503 = 440.13 kN. Using a knockdown factor of ⅛, this becomes 73.36 kN This deviates from the buckling load calculated using linear buckling analysis – namely 97.46 kN – but is still far larger than the predicted bearing failure load. The shell will likely fail in bearing.

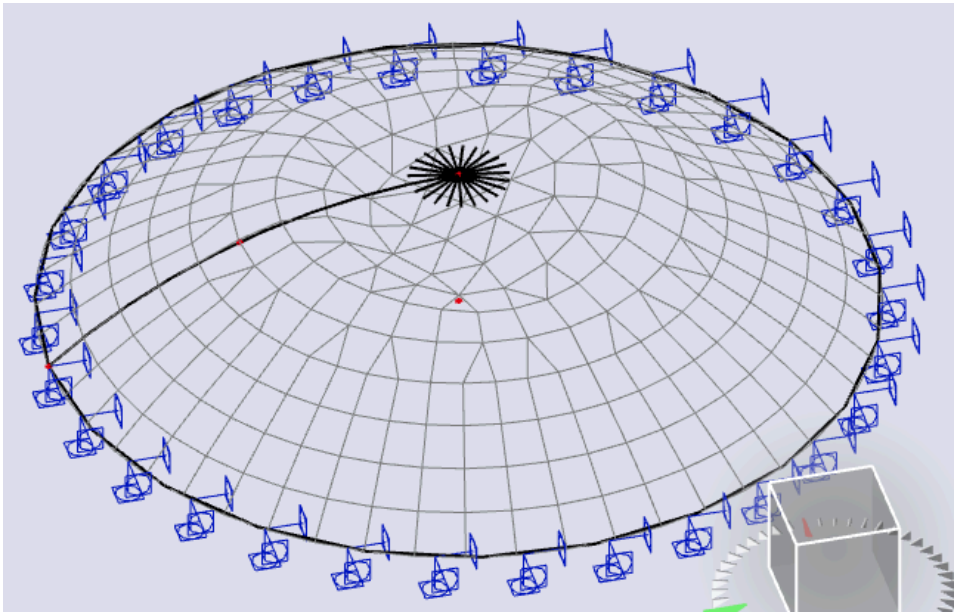

Figure 3.5: First view nonlinear buckling

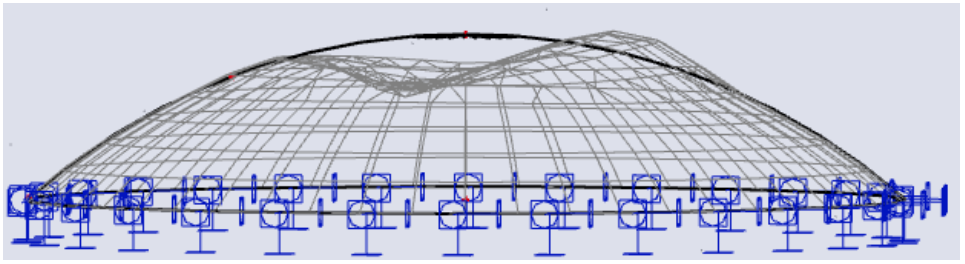

Figure 3.6: Second view nonlinear buckling

4. Building process

This chapter shows the building process of the shell model in the lab, including pictures and a step-by-step walkthrough.

4.1. The base

The base consists of two layers. One layer acts as the base and the other layer is a boundary. The wooden slats are placed inside the boundary. (see figure 4.1)

4.2. The wood layer

The wood layer is used to make the shape of the dome. First, the slats are placed in hot water, so they become more bendable. Then, two slats are attached to each other using wires. Lastly, the slats are glued to the base.



Figure 4.1: Wooden slats placed in the base

4.3. The connecting layer

To fix the slats in place and provide stability, a mesh material is used. This material is cut into strips and then placed and fastened onto the slats and base, using wires. On top of this, there is a layer of plastic. This layer is needed to make sure the concrete will not fall through the wooden layer.

4.4. The concrete layer

The last step of the building process is casting the concrete. The concrete is made by mixing cement, sand, and stones in a 1:2:3 ratio, respectively. After mixing the dry contents, water was added until the concrete had the desired workability.

Before casting the concrete, a second mesh layer is added to the dome. This layer acts as the rebar in concrete. Then, plastic straws are placed. These holes are used during testing. The concrete mix is then spread evenly on top of the plastic and mesh layer.



Figure 4.2: Plastic and rebar layer



Figure 4.3: Concrete layer

4.5. The testing setup

To make the dome ready for testing, wooden circles are cut for each hole. There is a rope going through each circle. The circles are connected using several layers of wooden bars. Each bar connects two ropes to each other. The ropes are connected to a platform, on which the load can be placed. To complete the test setup, a deformation metre is placed on top of the dome.



Figure 4.4: Test setup

5. Results

This chapter shows the results of the testing day and briefly explains their context. First, a distributed load test was conducted. When this test proved ineffective to get the structure to failure, a point load test was conducted as well.

5.1. Concrete cube testing

The simulations have been performed assuming the concrete has a compressive strength of 17.23 *MPa*. However, this is not representative of reality. During the construction of the shell roof, some concrete samples were set aside which were to be crushed on the day of testing. This way, they could reveal the compressive strength of the shell's concrete and the failure load prediction could be adjusted accordingly.

In total, three samples were made and tested, yielding the following results (Table 5.1):

Table 5.1: Experimental results of concrete compressive strength

Sample	Compressive strength (*MPa*)
1	1.2
2	1.6
3	1.1
Average	1.3

The average value of 1.3 *MPa* is significantly lower than the value that the simulations were made with. As a result, the load carrying capacity will likely be much lower than was calculated.

Throughout the concrete hardening process, the model was managed more effectively than the test pieces. This implies that the concrete strength derived from the model surpasses that of the three samples. Therefore, further calculations are performed with a value of 3.5 MPa for the compressive strength of the model. This value lies between the expected crushing stress of homemade concrete and the compressive strength of the three samples.

5.2. Distributed load test

The results of the distributed load test can be found in the graph of figure 5.1. This test was done using the setup in figure 5.2. The weight on the bottom panel was gradually increased and the displacement at the top of the dome was monitored.

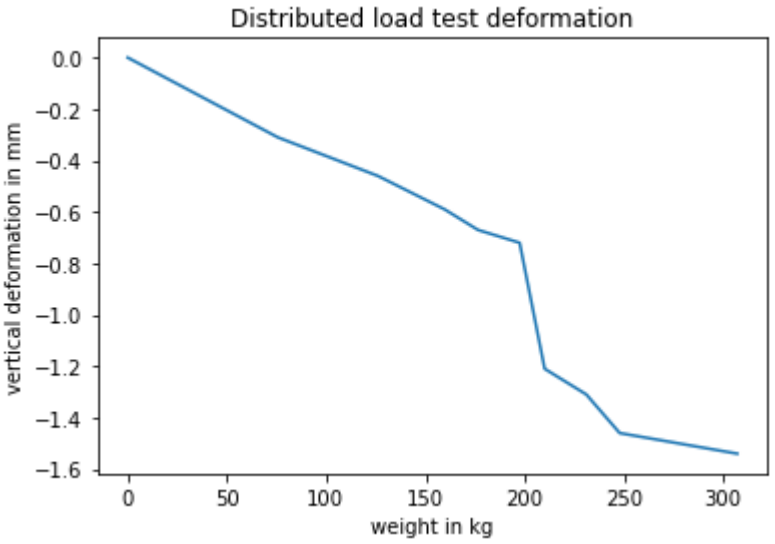

Figure 5.1: Deformation monitored during the distributed load test



Figure 5.2: Distributed load test setup

The displacement at the top of the dome (figure 5.1) shows negative values. This means the top of the dome moved upwards as the load increased. This is explained due to the fixed edge of the shell, which allows for bending moment in the concrete. The shell bends according to the direction of the bending moment, which at the top of the shell causes movement in the upwards direction (figure 5.3).

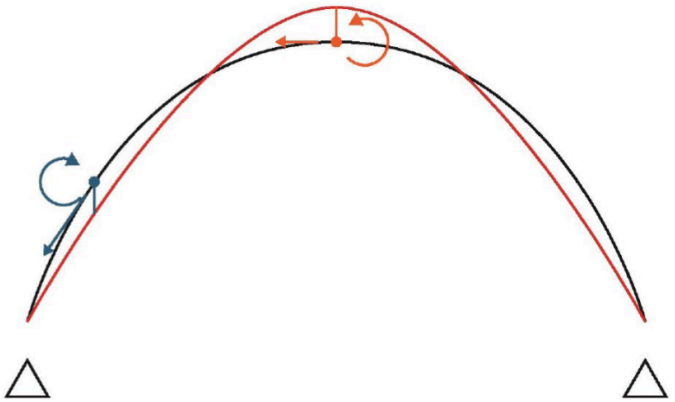

Figure 5.3: Bending moment in dome shell

The shell did not fail under the maximum load of 310 kg – increasing this load would be dangerous under lab conditions – so a point load test was decided upon.

5.3. Point load test

The point load test was conducted as a replacement for the distributed load test, which would require a dangerous amount of load exerted to complete. The test setup is shown in figure 5.4.

During the test, it was revealed that the thickness of the concrete in the middle of the shell was greater than anticipated, reaching up to 11.5 mm.

The following two formulas can be used to calculate the expected point load at which the structure would fail.

$\sigma = \frac{n}{t}$

$n = -\frac{\sqrt{3}}{8}\frac{P}{t}$ (Hoogenboom & Delft University of Technology, 2023)

Substituting these formulas together gives:

$P = -\frac{8}{\sqrt{3}}\sigma_{fail}t^2$

, where:

σ_{fail} = Stress at which concrete fails in *MPa*

t = Thickness of concrete dome in *mm*

P = Maximum point load in *N*

Filling in the values appropriate for this design gives:

$P = -\frac{8}{\sqrt{3}} * 3.5 * 11.5^2 = 2138\ N$

This yields a maximum load of 218 *kg*.



Figure 5.4: Point load test setup

The shell failed at 234.6 kg. The failure mode was ‘punching’ in which a portion of the concrete shell was punched out of the otherwise uncracked structure (figure 5.5).



Figure 5.5: ‘Punch’ failure of the shell model

6. Discussion

This chapter discusses various aspects of the design process, production and testing process that could have been changed to get a better result, did not take place as expected or had an otherwise significant influence on this project.

6.1. Design process

- In order to predict the behaviour of the shell model during testing, originally a linear and a nonlinear buckling analysis were planned. Due to complications using Scia Engineer, the finite element model software in question, the nonlinear buckling analysis was not completed in time for testing, hence why it is not used for determining the failure load. The tests showed that buckling was not a governing failure mode of the shell – quite expected, as it is a concrete shell. Nevertheless, a nonlinear buckling analysis can give valuable information about shell behaviour prior to testing, and it would be advisable to perform one in any future projects.
- When analysing the structure using a nonlinear buckling simulation in Scia Engineer, a relatively large element size was chosen. Later, it was recommended that a smaller element size should be used, but the interface of Scia had changed in the meantime. As a result, the group was unable to find a way to perform another simulation. So, while the analysis presented in paragraph 3.5 can be used to derive conclusions, it should not be relied upon on its own.

6.2. Production

- Wood slats were 500x8x6 mm instead of 500x8x4 mm, the latter were tested during the experiments but the former were used, meaning less bending was possible during construction. This resulted in a lot of the slats breaking while they were attempted to be bent. In the future, thinner slats should be used to facilitate a steeper curve. However, too steep a curve would make the concrete slide off the frame, which would result in an even more unevenly distributed thickness. Depending on the underlying layer, the concrete could slide off in its entirety starting from an angle of a mere 21.8 degrees (Zhiyong Zhou et al., 2021)
- While disposing of the structure, it was observed that the concrete shell's thickness was highly irregular: in some areas the thickness measured 2 *mm*, while other areas had a thickness of 2 *cm*. This was likely due to the way the shell was built: mesh was splayed over the wooden slats, but did not conform perfectly to the wood's curvature. This made applying the concrete more difficult, as there was irregular spacing between the frame and the mesh. Also, there was space between the wooden slats which comprised the frame. This space allowed the plastic to sag, in turn allowing the concrete to be much thicker than desired. Were this design to be made again, the mesh could be cut into smaller pieces. This would make the mesh able to take a more round shape.

6.3. Testing process

- From the simulations it followed that the shell structure could carry a load of 1128.44 *kg*, which was reduced by a factor of 5 due to the imperfect nature of the design's execution: the significantly lower compressive strength of the concrete, the larger-than-intended thickness, as well as general imperfections in the shell roof shape and the material. During testing it was observed that the structure could, in fact, carry significantly more than the proposed 225.69 *kg*, as it still stood unfazed under a load of approximately 310 *kg*. The reduction factor clearly reduced the predicted load too much. It is advisable in similar, future projects to use a reduction factor higher than 0.2.
- The prediction for the distributed load test failure (paragraph 3.5) was done based on the f_{cm} mean cylinder strength of the shell concrete on the day of testing. This was a prediction based on the used concrete mix, f_{cm} = 17.23 MPa. On the testing day, the concrete mix was tested and shown to measure only 1.3 MPa. This means the prediction done in paragraph 3.5 is not accurate, but rather too high. This further showcases the previous point, which states that the reduction factor used on the prediction was too low.
- During testing, the displacement gauge measured a displacement at the top of the dome of -0.7 *mm* at 200 *kg*, while the simulations indicated the displacement should be 0.2 *mm*. There are a few conceivable reasons for this discrepancy:
    - The gauge moved relative to the dome. The dome's top is very irregular with regards to height as a result of the concrete mix. Aggregate particles stick out from the surface. if the needle of the displacement gauge accidentally slid onto such a particle, the negative displacement would be explained.
    - The wood frame underneath combined with the steel mesh altered the behaviour of the dome so drastically that the displacement at the top of the dome became negative.
    - The displacement gauge was interpreted incorrectly: Either the gauge was mounted upside-down, or the values were read wrong.
    - The thickness of the model shell was both larger than designed and irregular, with parts of the shell being approximately 1 *cm* thick. This could have contributed to the unexpected behaviour of the structure.

7. Conclusion

This chapter provides a conclusion of the report, in the form of answering the question: would the real shell – which the scale model is based on – be able to bear its required loads?

The goal of the scale model shell test was to test whether the concrete structure could be built in its real size (including selfweight and 1 kN/m^2 snow, not including other forces such as wind or repair workers). The shell model was 0.15 *m* tall with a radius of 0.4 *m* and a shell thickness of +- 0.005 *m*. The real shell would be 20x as large, 3 *m* tall with a radius of 8 *m* and a shell thickness of 0.1 *m*.

7.1. Distributed load test

The distributed load test done on the shell model was based on the real shell. This means the prediction of a failure load of 225.7 *kg* is a scaled down version of the predicted load the real shell could bear before failure.

It was shown in the distributed load test that this prediction was too small. The shell model held roughly 310 *kg* before the test was dismantled due to lab safety concerns. This means the prediction was too low. The real shell therefore can bear its selfweight and snow load. However, it is worth a review whether the shell could be built with a thinner concrete layer, as this test implies the structure is overdesigned.

The maximum vertical deformation during this test was 1.55 *mm* (upwards direction, see figure 5.1). Translated to the real shell, this would be 1.5 * 20 = 30 *mm*. This deformation does not cause failure, as the test shows. Important is then to assess the serviceability of this deformation. 3 *cm* of deformation on a height of 3 *m* does not cause significant issues in terms of user comfort, meaning this is an allowable amount of deformation for the real shell.

7.2. Point load test

The point load test was used as a replacement for the distributed load test to lead the shell model to failure, when the distributed test proved ineffective. A prediction of the failure load was done at 218 *kg*. The shell finally failed at 234.6 *kg*, with a ‘punch’ failure mode.

The prediction of the point load failure was roughly accurate. The real shell can bear 234.6 kg * 20^2 = 93840 kg in point load. The point load on a shell roof is in reference to people needing to access the roof, usually for maintenance. It is unlikely that a human and necessary equipment will measure 93840 kg in point load. This means the shell structure is overdesigned when it comes to point load failure. This implies the thickness of the shell is too large and can be reduced.

Bibliography

Hoogenboom, P. & Delft University of Technology. (2023, augustus). Notes on Shell Structures. https://phoogenboom.nl/b17_handout_5.pdf

*Shell Structure Model Experimenta*l. (2017, 12 juni). [Video]. Youtube. Geraadpleegd op 22 januari 2024, van https://www.youtube.com/watch?v=IeUC05rx7O8&t=204s

Taubman College of Architecture and Urban Planning. (2023, 14 march). *Design and construction of grid shells and other reticulated shell structures - Taubman College.* Taubman College. https://taubmancollege.umich.edu/project/design-and-construction-of-grid-shells-and-other-reticulated-shell-structures/

Zhiyong, Z. Sen, G. Xiaolu, C. Chengying, G. (2021). Study of Frictional Force between Lining Concrete and Rubber Blocks. *Journal of Physics, Conference Series*, *2011*(1), 012034. https://dx.doi.org/10.1088/1742-6596/2011/1/012034