Delft University of Technology
Faculty of Civil Engineering and Geosciences
Structural Mechanics Section

Exam CIE4180: Plate Analysis
Thursday 30 January 2020, 13:30 – 16:30

This exam consists of 6 questions.
The respective weights are 1.6, 1.6, 1.6, 1.6, 1.8 and 1.8.

Use **separate sheets of paper for each question**!

Write your name and student number **on every page of your work.**

In this exam the notation and sign conventions of the reader (part 1 and 2) and the book (Plates and FEM) have been adopted. **You are supposed to use the same notation and sign convention.**

Question 1

Use **separate sheets of paper for each question**!

Consider the plane stress (or plate membrane) problem below: a square plate with a square hole at the centre of the plate. See the figure below.

The length and height of the plate is 1000 mm and the thickness is 150 mm.

The length and height of the hole is 250 mm.

The plate is fully support along the bottom edge.

At the top edge a stiff and slender plate is connected with the same thickness and a substantially higher Young's modulus.

The top of this slender plate is loaded by an equally distributed downwards line load *p* of 1500 N/mm.

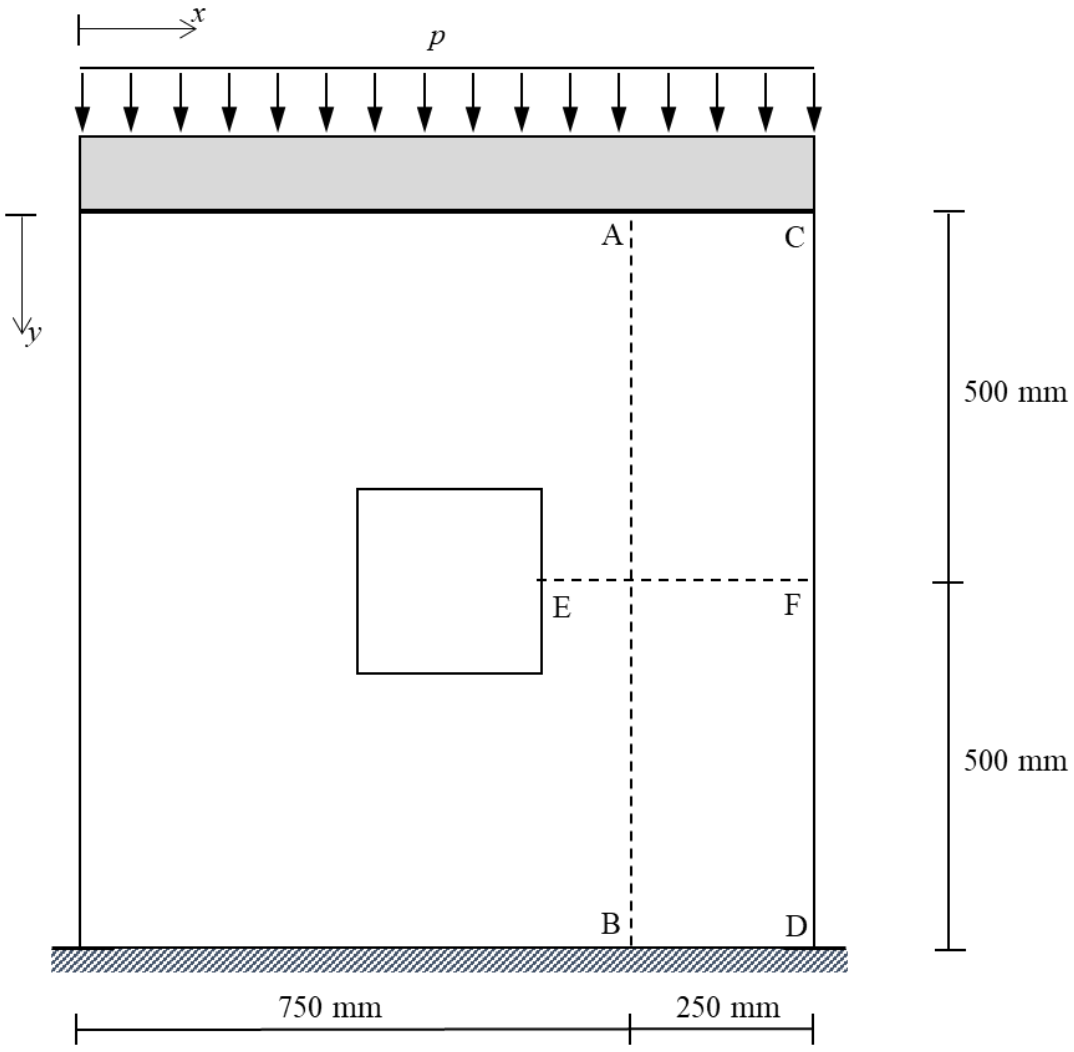

Figure 1.1: plane stress (or plate membrane) problem

Results from a finite element model are shown below.

Figures 1.2 and 1.3 show u_x and u_y, respectively along the vertical line segments AB and CD.

Figure 1.4 shows σ_{yy} along the horizontal line segment EF (without values for σ_{yy}!).

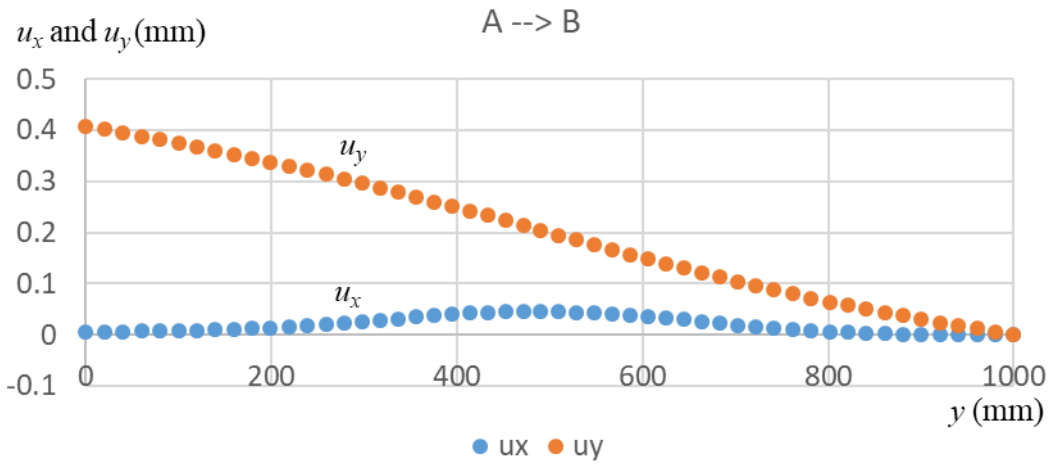

Figure 1.2: horizontal and vertical displacements along vertical line segment AB

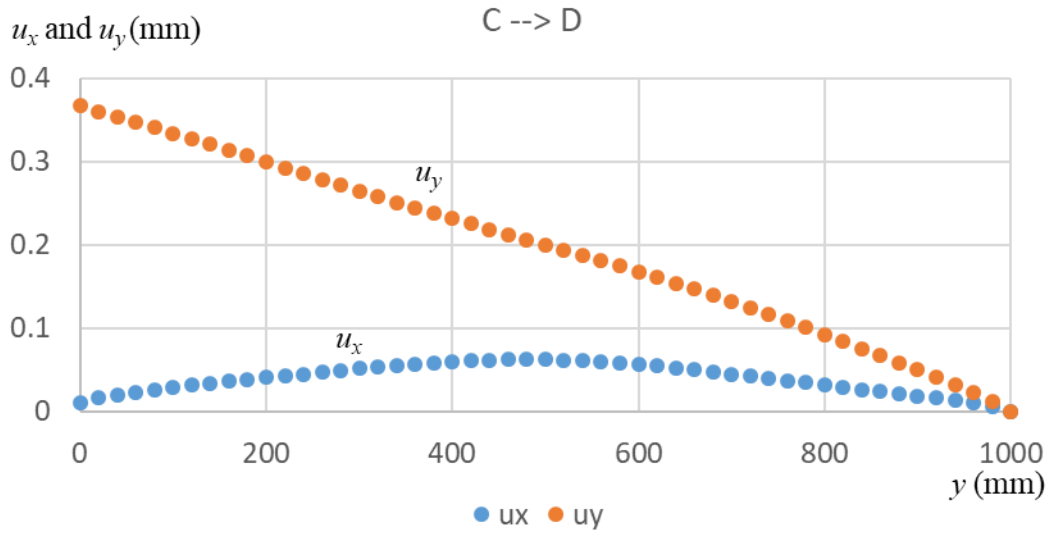

Figure 1.3: horizontal and vertical displacements along vertical line segment CD

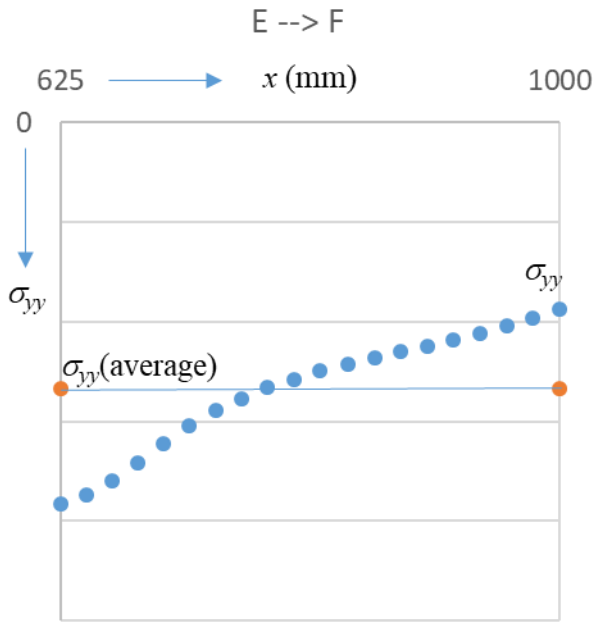

Figure 1.4: vertical stresses along horizontal line segment EF. The scale along the vertical σ_{yy} axis is not given. The average σ_{yy} value over this cross section is indicated with a straight horizontal line.

For all questions below: clearly indicate how you used the above graphs to extract data to answer the questions! Also indicate the figure number.

a) Calculate γ_{xy} in point D

b) Consider the bottom edge of the plate (y = 1000 mm and $0 \leq x \leq 1000$ mm). Sketch a graph of γ_{xy} along this line segment.

c) Calculate γ_{xy} in point E

d) Calculate the Young's modulus of the plate. Hint: use quantities in point F.

Question 2

Use **separate sheets of paper for each question**!

A linear finite element analysis is made of a plate with dimensions l_1+l_2 by d, see Figure 2.1 below. The plate has an uniform thickness t. Young's modulus is E and Poisson's ratio is ν.

The plate is supported at 3 points. The plate is loaded, in-plane, by a uniformly distributed load p at the top of the plate. There is no dead load.

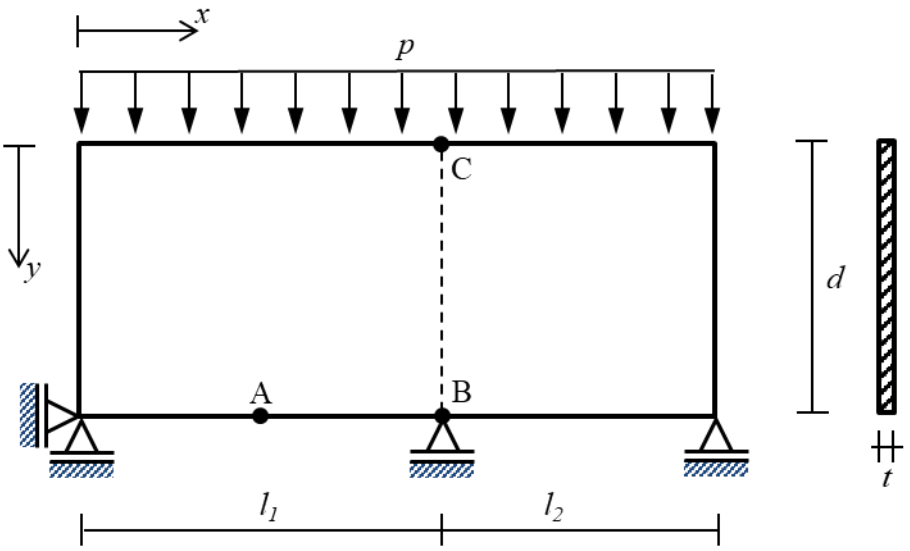

Figure 2.1: a plate with dimensions l_1+l_2 by d

Values:

l_1 = 2400 mm, l_2 = 1800 mm, d =1800 mm, t = 110 mm,

E = 32500 MPa, ν = 0.19,

p = 2000 N/mm.

In the FE analysis 4-noded (i.e. linear) plane stress elements are used with element size h = 100 mm.

a) Consider line segment CB with $x = l_1$ and $0 \le y \le d$. Sketch a graph of the calculated σ_{yy} as function of y. Explain the values in the points C and B.

b) Consider point A with $y = d$ and $x = ½\ l_1$.The FE analysis gives a displacement in y-direction u_y^{FE}. A beam model on 3 supports which is based on Euler–Bernoulli beam theory (or classical beam theory) gives a displacement in y-direction u_y^{EB}, also for point A. How do u_y^{FE} and u_y^{EB}compare? Explain your answer.

Now consider the modified plate with two sloped top edges, see Figure 2.2 below. The two uniformly distributed loads *p* are perpendicular to each of the two sloped edges.

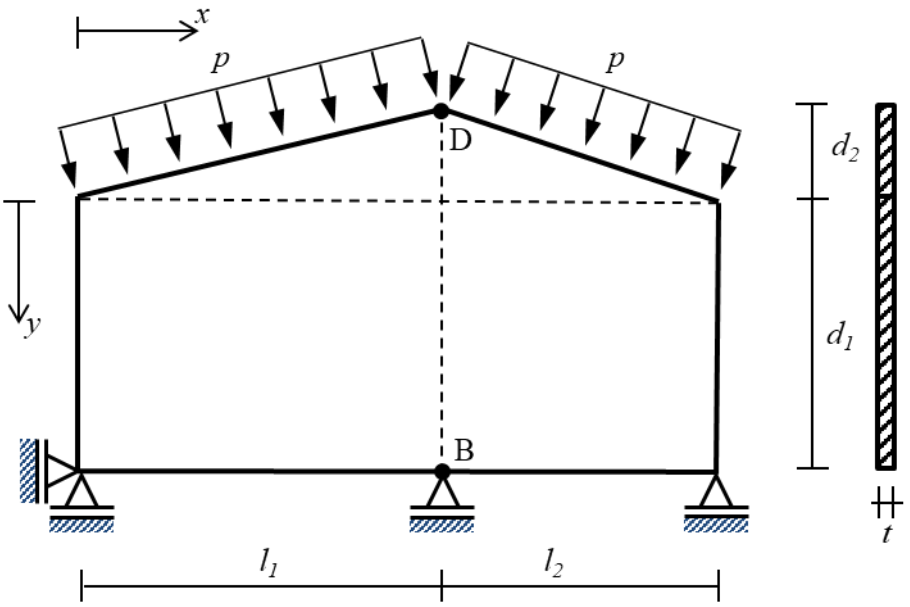

Figure 2.2: a plate with two sloped top edges

Additional values: d_1 = 1800 mm, d_2 = 600 mm.

c) What is the horizontal reaction force in the bottom left corner?

d) Calculate σ_{yy} in point D.

Question 3

Use **separate sheets of paper** **for each question**!

a) Which of the following words belong together?

shear deformation

Reissner

thin

thick

Kirchhoff

Mindlin

concentrated shear force

b) What is a singularity in the plate theory? Choose A, B, C or D.

A Point in a plate where a membrane force, moment or shear force is infinite.
B Point load, point support, re-entrant corner or a change in support.
C Stress concentration in the edge of a plate.
D Plate problem for which infinitesimal solutions do not exist.

c) Many software developers think that we do not need elements based on the Kirchhoff plate theory. Why is this not true? Choose A, B, C or D.

A The Mindlin-Reissner plate theory is not valid for thin plates.
B The boundary conditions of the Mindlin-Reissner plate theory are too complicated.
C Elements based on the Mindlin-Reissner theory need to be very small.
D Plates modelled with the Mindlin-Reissner plate theory have many singularities.

d) Shown is a corner molecule of the finite difference method.
How many discrete elements are in this molecule?

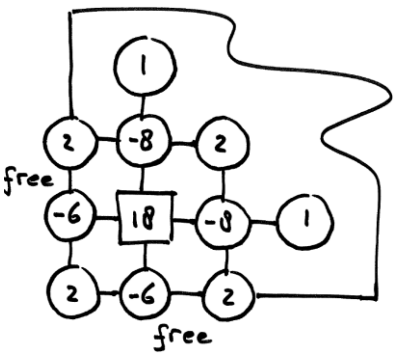

e) What element size is recommended for the Kirchhoff plate theory?
Choose A, B, C or D.

A Exactly two times the thickness
B Smaller than two times the thickness
C Approximately two times the thickness
D Considerably larger than two times the thickness

f) A plate has been analysed by the finite element method. A part of this plate is cut free. The figure below shows the distributed load and support reactions. The figure also shows the bending moment m_{xx} in a cut. The torsion moment m_{xy} and the shear force v_x occur also in this cut but these are not displayed.
Is this plate part in moment equilibrium around the *y* axis? Explain your answer.

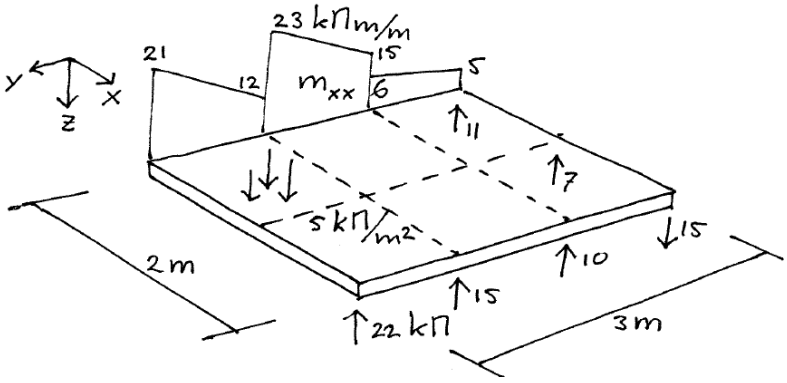

g) Explain the difference between m_{xy} and m_{yx}.

h) A plate is loaded out of plane. An edge in the *y* direction is fixed. The plate is modelled with the finite element method. Which degrees of freedom need to be imposed?
Choose from A to L. You can choose more than one.

A displacement in the x direction
B displacement in the y direction
C displacement in the z direction
D rotation around the x axis
E rotation around the y axis
F rotation around the z axis
G support moment around the x axis
H support moment around the y axis
I support moment around the z axis
J support force in the x direction
K support force in the y direction
L support force in the z direction

Question 4

Use **separate sheets of paper** **for each question!**

A plate is loaded perpendicularly to its plane. One edge is fixed, two edges are simply supported and the others are free (Fig. 4.1). The plate length is 16 m and the width is 14 m. The plate thickness is 200 mm. A distributed load of 7 kN/m^2 is applied in the *z* direction. This distributed load includes self-weight.

A linear elastic finite element model is made. The following material properties are used, E = 34100 N/mm^2, ν = 0.2. Four-node plate elements are used (Kirchhoff theory). The element size is 400 mm. The results are shown in Figures 4.2 to 4.6.

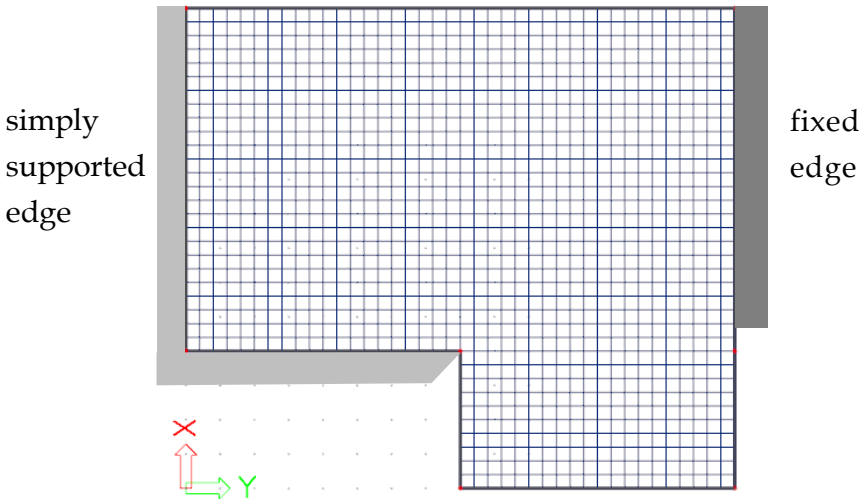

Figure 4.1. Plate with supports, load and finite element mesh

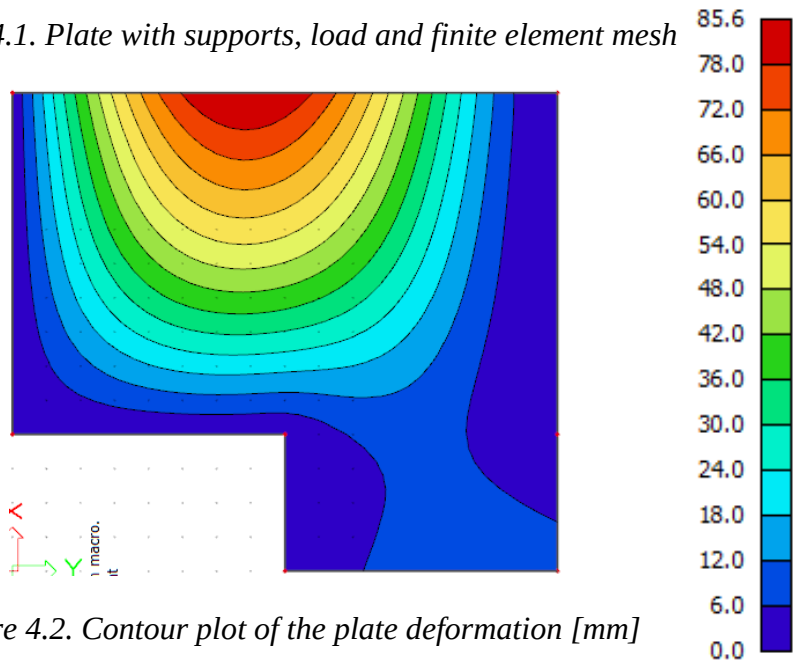

Figure 4.2. Contour plot of the plate deformation [mm]

a) How much is the largest deflection? Where does it occur?

b) Is the deflection of the supported edges exactly zero? How do you know?

c) We could do the analysis again with 8 node elements. Would the computed deflection be smaller, larger or exactly the same? Explain your answer.

d) We could do the analysis again with Mindlin-Reissner elements. Would the computed deflection be smaller, larger or exactly the same? Explain your answer.

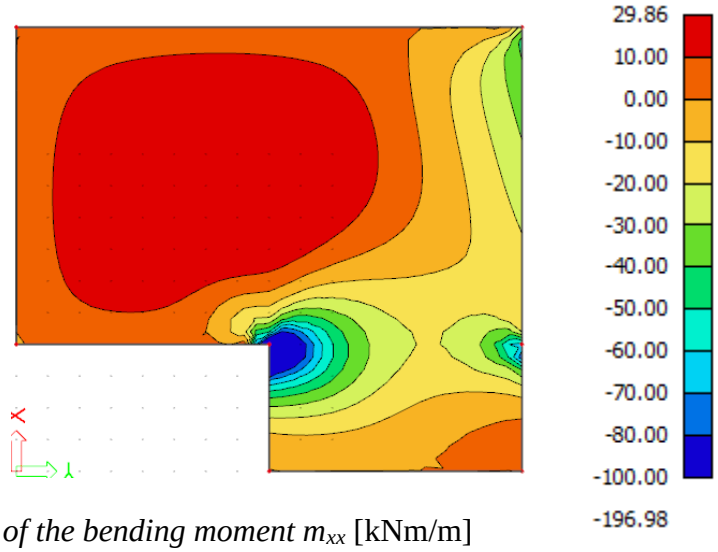

Figure 4.3. Contour plot of the bending moment m_{xx} [kNm/m]

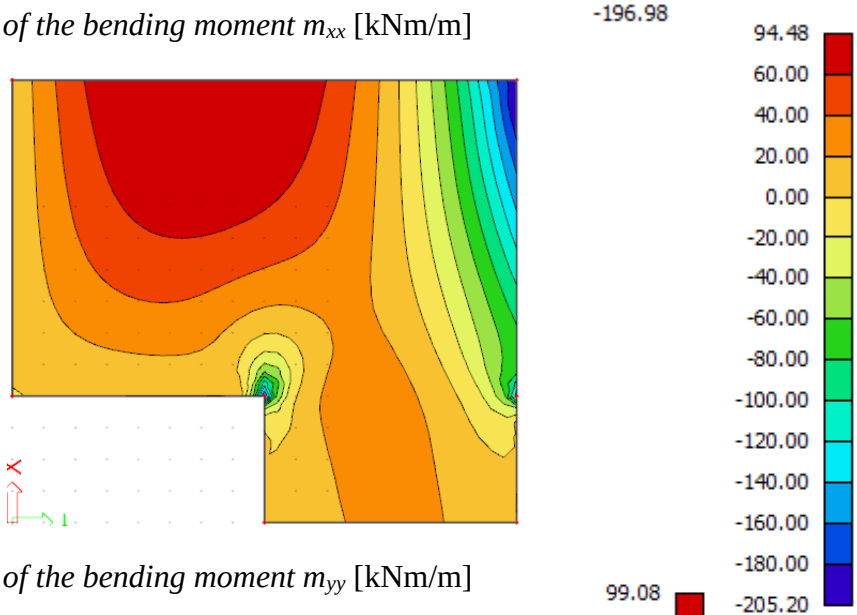

Figure 4.4. Contour plot of the bending moment m_{yy} [kNm/m]

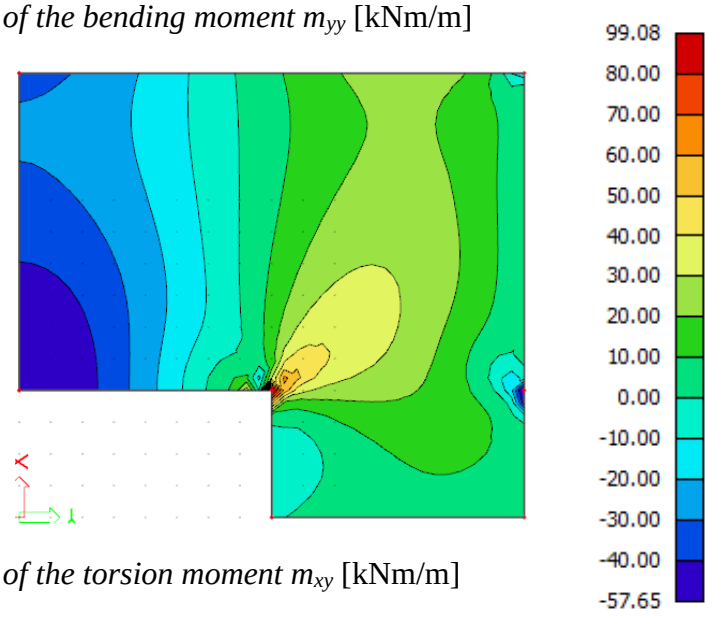

Figure 4.5. Contour plot of the torsion moment m_{xy} [kNm/m]

e) Do the moments agree with the boundary conditions? Explain your answer.

f) In which corner is a large support force pulling the plate down? (z direction)

How large is this force?

g) The legend of the shear forces stops before the largest value of 393.79 kN/m is reached.

Why does not the legend continue to 393.79 kN/m?

h) In the long free edge act both a shear force v_y and a concentrated shear force V.

Which of these produces the largest stress? Explain your answer.

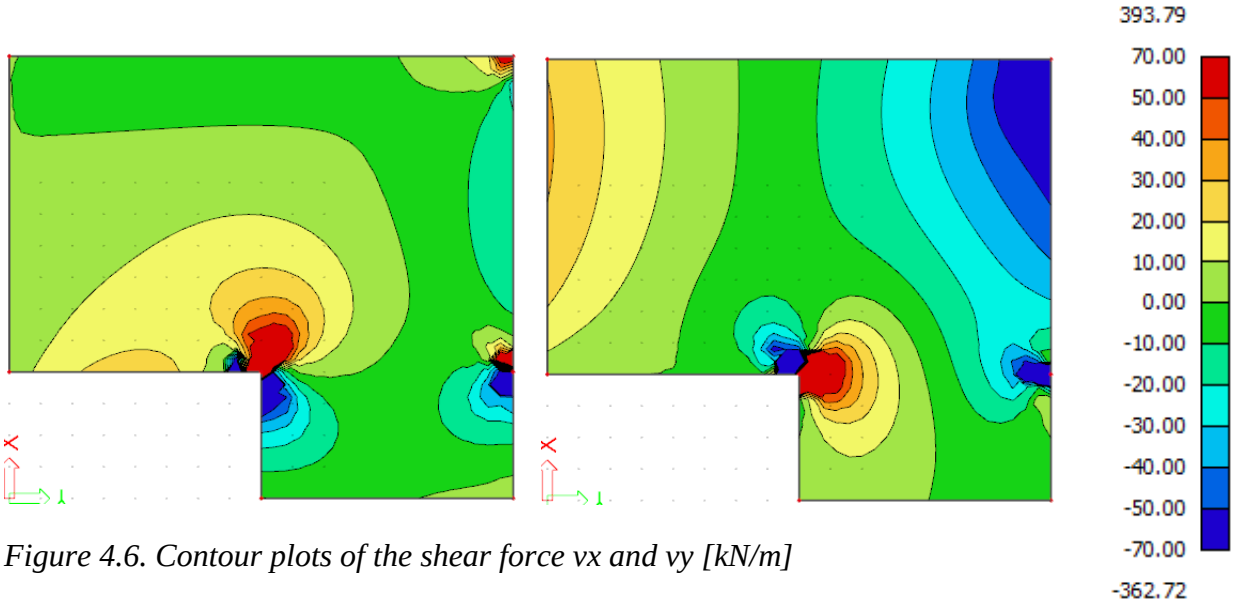

Figure 4.6. Contour plots of the shear force vx and vy [kN/m]

Question 5

Use **separate sheets of paper** **for each question**!

A reinforced concrete plate has a thickness of 390 mm. The plate carries 15 kN/m^2 (self-weight plus live load; partial factors included). At a particular location the moments are

m_{xx} = 294 kNm/m
m_{yy} = -172 kNm/m
m_{xy} = 259 kNm/m

The reinforcement consists of two meshes. As usual, one mesh is close to the bottom surface the other mesh is close to the top surface. Each mesh has bars in the *x* direction and bars in the *y* direction. The plate has no shear reinforcement. All bars have a diameter of 24 mm. The yield strength of the reinforcing steel is 410 N/mm^2 (partial factor included).

a) A computer calculates the following required moment capacities of the reinforcement. Did the computer make a mistake? Explain your answer.

m_{xt} = 0 m_{yt} = 501 kNm/m
m_{xb} = 541 kNm/m m_{yb} = 0

b) An engineer selects reinforcement that provides the following moment capacities. Did the engineer make a mistake? Explain your answer.

m_{xt} = 100 kNm/m m_{yt} = 480 kNm/m
m_{xb} = 480 kNm/m m_{yb} = 100 kNm/m

c) Are the reinforcing bars in the principal moment directions? Explain your answer.

d) Which is the more efficient way of carrying load; bending or torsion? Explain your answer.

e) The particular location of this question is in the edge of the plate. Do we need to apply shear reinforcement too? Explain your answer.

Useful equations
top $m_{xt} = -m_{xx}+|m_{xy}|$ $m_{yt} = -m_{yy}+|m_{xy}|$
bottom $m_{xb} = m_{xx}+|m_{xy}|$ $m_{yb} = m_{yy}+|m_{xy}|$
$m_1=(m_{xx}+m_{yy})/2+\text{sqrt}(((m_{xx}-m_{yy})/2)^2+m_{xy}^2)$
$m_2=(m_{xx}+m_{yy})/2 -\text{sqrt}(((m_{xx}-m_{yy})/2)^2+m_{xy}^2)$
top $(m_{xt}+m_{xx})*(m_{yt}+m_{yy}) >= m_{xy}^2$
bottom $(m_{xb}-m_{xx})*(m_{yb}-m_{yy}) >= m_{xy}^2$

Question 6

Use **separate sheets of paper** **for each question**!

Consider a rectangular membrane plate. The dimension are given in the figure below. The corners are indicated as 1, 2 ,3 and 4. The origin of all axes is in the middle of the plate. The *x*- and *y*-axes are parallel to the edges of the plate.

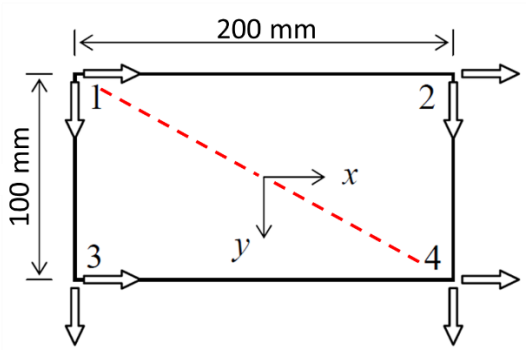

Figure 6.1: a rectangular membrane plate

The displacement field is known:

$$u_x(x,y) = 0.001 + 0.002x + 0.003y + 0.004xy$$
$$u_y(x,y) = 0.005 + 0.006x + 0.007y + 0.008xy$$

a) What is the rigid body displacement for translation in *x*-direction?

b) What is the rigid body displacement for rotation?

c) Consider the diagonal from corner 1 to corner 4. For the points along this diagonal, sketch a graph of u_x as a function of *x*.

d) What is the minimum number of rectangular 4-noded membrane elements needed to adequately describe the displacement field. Explain your answer.

e) Assume E = 30000 N/mm^2 and ν = 0.2. Evaluate $\frac{\partial \sigma_{xx}}{\partial x} + \frac{\partial \sigma_{xy}}{\partial y}$ and interpret the result from the viewpoint of the finite element method.

Brief answers

Question 1

a) From the u_x graph at $y = 1000$ of Figure 1.3 we estimate $\frac{\partial u_x}{\partial y} \approx -0.15 \times 10^{-3}$ (estimated from the slope of the curve). From the boundary conditions: $\frac{\partial u_y}{\partial x} = 0$. Consequently $\gamma_{xy} \approx -0.15 \times 10^{-3}$.

b) At x = 1000 mm we have $\gamma_{xy} \approx -0.15 \times 10^{-3}$. From the u_x graph at $y = 1000$ of Figure 1.2 we find a very small value for γ_{xy} at x = 750 mm. The graph be should anti-symmetric around x = 500 mm. The graph may look like this:

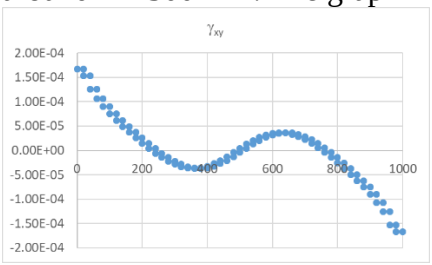

c) From the boundary conditions $\sigma_{xy} = 0$. Consequently $\gamma_{xy} = 0$.

d) In point F, we have $\sigma_{xx} = 0$ (from boundary conditions). The average σ_{yy} at the cross-section EF can be calculated as $-\frac{1000}{1000-250}\frac{1500}{150} = -13.3$ MPa. From Figure 1.4 we can now estimate $\sigma_{xx} \approx -9$ MPa in point F. The vertical strain in F can be estimated from the slope of the u_y graph at $y = 500$ in Figure 1.3: $\varepsilon_{yy} \approx -0.0003$. Finally $E \approx \frac{\nu \times 0 \; - \; 9}{-0.0003} = 30000$ MPa

Question 2

a) In point C, y = 0, σ_{yy} will be $-p/t$ = -18.2 MPa. For increasing y, σ_{yy} will become more negative. Point B, $y = d$, is a singularity and σ_{yy} will depend on h.

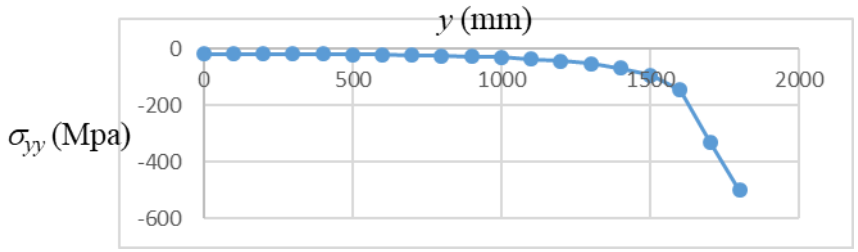

b) $u_y^{\mathrm{FE}} \ll u_y^{\mathrm{EB}}$ The Euler-Bernoulli 'plane sections remain plane' assumption is no longer valid. Most of the load is delivered to the supports by arch mechanisms.

c) Horizontal equilibrium gives $F_H = \sqrt{l_1^2 + d_2^2}\frac{d_2}{\sqrt{l_1^2+d_2^2}}p - \sqrt{l_2^2 + d_2^2}\frac{d_2}{\sqrt{l_2^2+d_2^2}}p = 0$

d) -18.2 Mpa. This can e.g. be shown by considering an infinitesimally small triangle: make a horizontal cut just below point D. Considering vertical equilibrium gives $t(l_1 + l_2)\sigma_{yy} + \frac{l_1}{\sqrt{l_1^2+d_2^2}}\sqrt{l_1^2 + d_2^2}\,p + \frac{l_2}{\sqrt{l_2^2+d_2^2}}\sqrt{l_2^2 + d_2^2}\,p = 0$ which yields $\sigma_{yy} = -\frac{p}{t}$

Question 3

a)

shear deformation	thin
Reissner	Kirchhoff
thick	concentrated shear force
Mindlin	

b) A

c) C

d) 8

e) C

f) yes moment in the section

(21+12)/2*1 + (23+15)/2*1 + (6+5)/2*1 = 41 kNm

moment due to the support reactions and the load

22*2 + 15*2 + 10*2 - 15*2 + 7*1 - 5*2*3*1 = 41 kNm

g) There is no difference. These are two names for one thing.

h) For a thin plate C and E are required and sufficient if the program allows perpendicular load only. For a thick plate C, D and E are required and sufficient.
We can also choose A, B, C, D, E and F because we do not need to think about it, it probably gives almost the same result and it prevents the plate from rolling away in case in-plane load is allowed too. Answers G to H are wrong because we do not specify dynamic boundary conditions in the finite element method.

Question 4

a) 85.6 mm. Approximately in the middle of the long free edge.

b) It should be exactly zero. It is dark blue at the support. So it is between 0 and 6 mm.
No reason to think it is wrong.

c) Larger. 8 Node elements are less restrained than 4 node elements.
But the difference would be very small because the elements are sufficiently small.

d) Larger. Shear deformation would be added. But the difference would be very small because in thin plates shear deformation is small compared to bending deformation.

e) Yes.

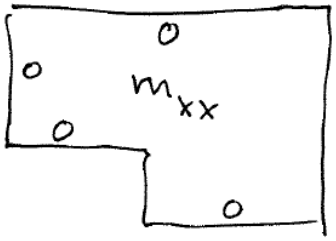

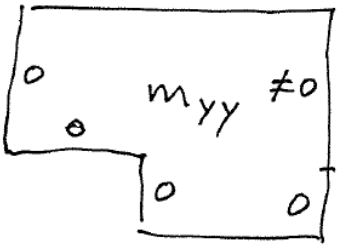

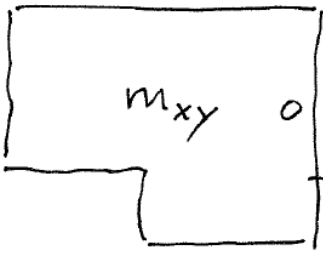

f) R=2*mxy=2*57.65=115 kN

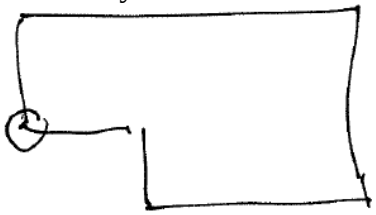

g) The engineer that made the analysis adjusted the maximum value of the legend to push the colours of the contour plot from the singularities into the plate.

h) V syz= 3/2* **vy** /t=3/2*(-50)/400=-0.19 N/mm^2

syz=-3/2*sqrt(10)* **V** /t^2=- 3/2*sqrt(10)*(-30 000)/400^2=0.89 N/mm^2 is larger

Question 5

a) Yes (mxt+mxx)*(myt+myy) >=? mxy^2
(0+294)*(501-172) >= ? 259^2
96726 >=? 67081 OK … but it is not the smallest possible amount.
(mxb-mxx)*(myb-myy) >=? mxy^2
(541-294)*(0+172) >=? 259^2
42484 >=? 67081 not OK

b) Yes (mxt+mxx)*(myt+myy) >=? mxy^2
(100+294)*(480-172) >=? 259^2
121352 >=? 67081 OK
(mxb-mxx)*(myb-myy) >=? mxy^2
(480-294)*(100+172) >=? 259^2
50592 >=? 67081 not OK

c) No The bars are in the local x and y directions,
which are not the principal directions because mxy is not zero.

d) Bending
Reinforcement in the current directions (bending and torsion)

mxt=-mxx+|mxy|	myt=-myy+|mxy|	mxb=mxx+|mxy|	myb=myy+|mxy|
=-294+259	=172+259	=294+259	=-172+259
=0	=431 kNm/m	=553 kNm/m	=87 kNm/m

Moments in the principal directions
m1=(mxx+myy)/2+sqrt((mxx-myy)^2/4+mxy^2)
=(294-172)/2+sqrt((294+172)^2/4+259^2)
=61+348
=409 kNm/m
m2=61-348
=-278 kNm/m
Reinforcement in the principal directions (bending, no torsion)

m1t=-m1	m2t=-m2	m1b=m1	m2b=m2
=0	=278 kNm/m	=409 kNm/m	=0

The latter reinforcement is much less than the former

e) Yes To carry the concentrated shear force V = mxy.
(In a free edge mxx=0 or myy=0. In simply supported edge mxx=0 and myy=0.
In a fixed edge mxy=0. Apparently, x nor y is in the edge direction. The edge direction can be found by rotating the coordinate system. If we rotate to mxy to mst=0 then mss and mtt have different signs. In a fixed edge mss and mtt have the same sign.
Therefore, the edge must be free or simply supported. If we rotate to mxx to mss=0 or myy to mtt=0 then mst has a value. This value is the concentrated shear force V.)

Question 6

a) 0.001

b) (0.006 – 0.003)/2 = 0.0015

c) substitute $y = x/2$ in u_x and sketch:

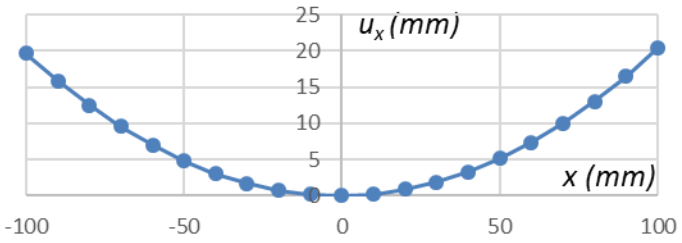

d) 1 single element suffices. Its shape functions define polynomials for the displacement field with exactly the same terms.

e) ε_{xx}=(0.002+0.004y) , ε_{yy}=(0.007+0.008x), $\gamma_{xy} = (0.009 + 0.004x + 0.008y)$ gives $\sigma_{xx} = (0.002 + 0.004y)\frac{E}{1-\nu^2} + (0.007 + 0.008x)\frac{\nu E}{1-\nu^2}$, $\sigma_{xy} = (0.009 + 0.004x + 0.008y)\frac{E}{2(1+\nu)}$, which gives $\frac{\partial \sigma_{xx}}{\partial x} + \frac{\partial \sigma_{xy}}{\partial y} = \left(0.008\frac{\nu}{1-\nu^2} + 0.008\frac{1}{2(1+\nu)}\right)E = 0.005E = 150 \neq 0$. The fact that this leads to a nonzero value shows that the finite element method provides an approximation in the sense that internal equilibrium equations are violated (internal equilibrium does not occur, but equilibrium in the global is satisfied)