Plates loaded in plane

Hoogenboom, 28 Nov. 2016

Two coupled differential equations (reader 1 page 17, eq. 1.19)

$$-\frac{Et}{1-\upsilon^2}\left(\frac{\partial^2 u_x}{\partial x^2}+\frac{1-\upsilon}{2}\frac{\partial^2 u_x}{\partial y^2}+\frac{1+\upsilon}{2}\frac{\partial^2 u_y}{\partial x \partial y}\right)=p_x$$

$$-\frac{Et}{1-\upsilon^2}\left(\frac{\partial^2 u_y}{\partial y^2}+\frac{1-\upsilon}{2}\frac{\partial^2 u_y}{\partial x^2}+\frac{1+\upsilon}{2}\frac{\partial^2 u_x}{\partial x \partial y}\right)=p_y$$

Three ways to solve these numerically

- Finite Difference Method
- Discrete Element Method
- FEM

Finite Difference Method
(additional assignment)

Draw a grid onto the structure.

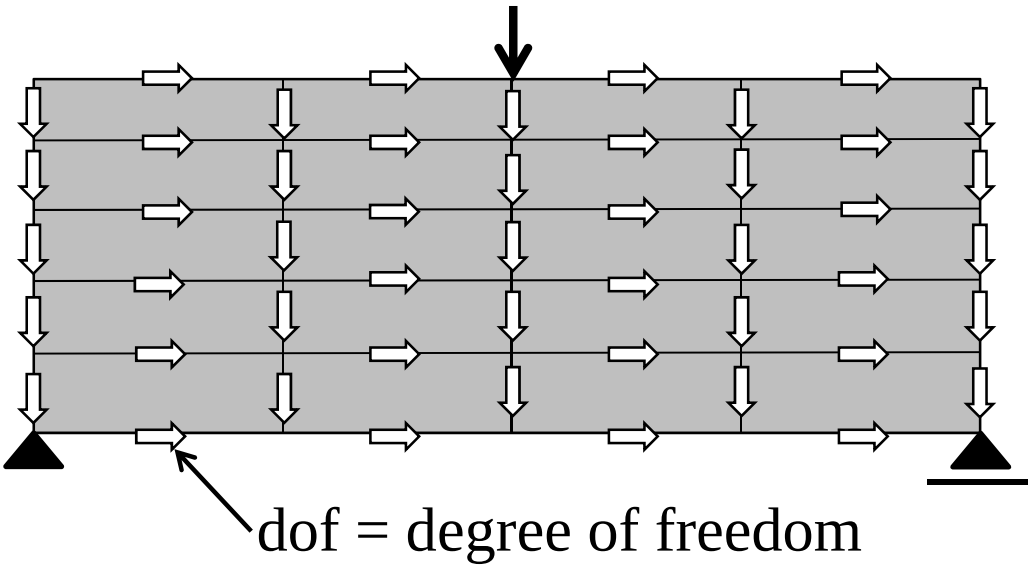

We can also choose the dofs differently but this particular choice leads to a very simple method.

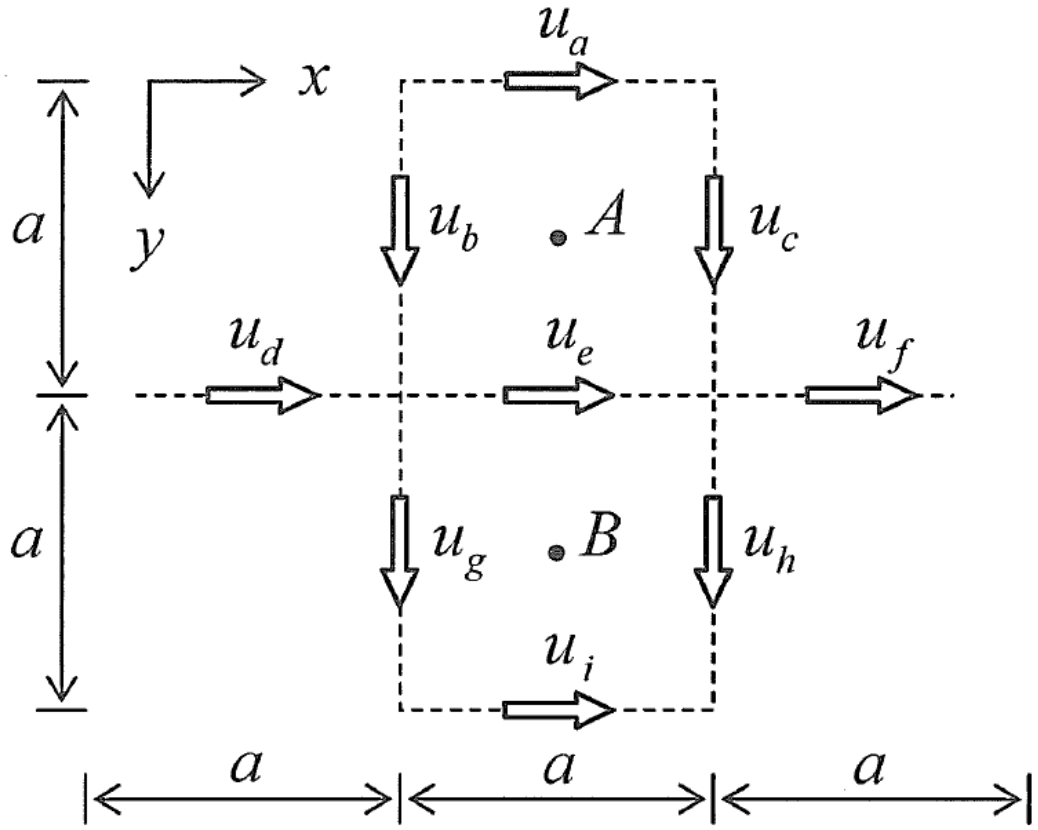

Fig. 2.9: Grid with displacements.

(reader 2, page 18)

$$\frac{\partial u_x}{\partial x} = \frac{u_e - u_d}{a} \qquad \frac{\partial u_x}{\partial x} = \frac{u_f - u_e}{a}$$

$$\frac{\partial^2 u_x}{\partial x^2} = \frac{\dfrac{u_f - u_e}{a} - \dfrac{u_e - u_d}{a}}{a} = \frac{u_f - 2u_e + u_d}{a^2}$$

et cetera.

Substitution in eq. 1.19 gives
(reader 2 page 19)

$$Et\left(-\frac{1}{2}u_a-\frac{1}{2}u_b+\frac{1}{2}u_c-u_d+3u_e-u_f+\frac{1}{2}u_g-\frac{1}{2}u_h-\frac{1}{2}u_i\right)=p_x\,a^2$$

We assume $\upsilon = 0$. This makes things easier but is not necessary.

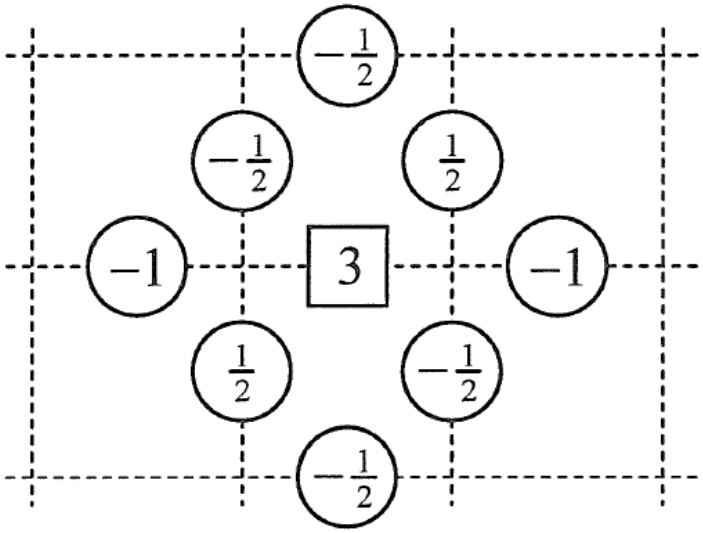

Fig. 2.10: Differential molecule in u_x direction.

$$u_e=\frac{1}{3}\left(\frac{p_x a^2}{Et}+\frac{1}{2}u_a+\frac{1}{2}u_b-\frac{1}{2}u_c+u_d+u_f-\frac{1}{2}u_g+\frac{1}{2}u_h+\frac{1}{2}u_i\right)$$

Excel (or any other spread sheet)

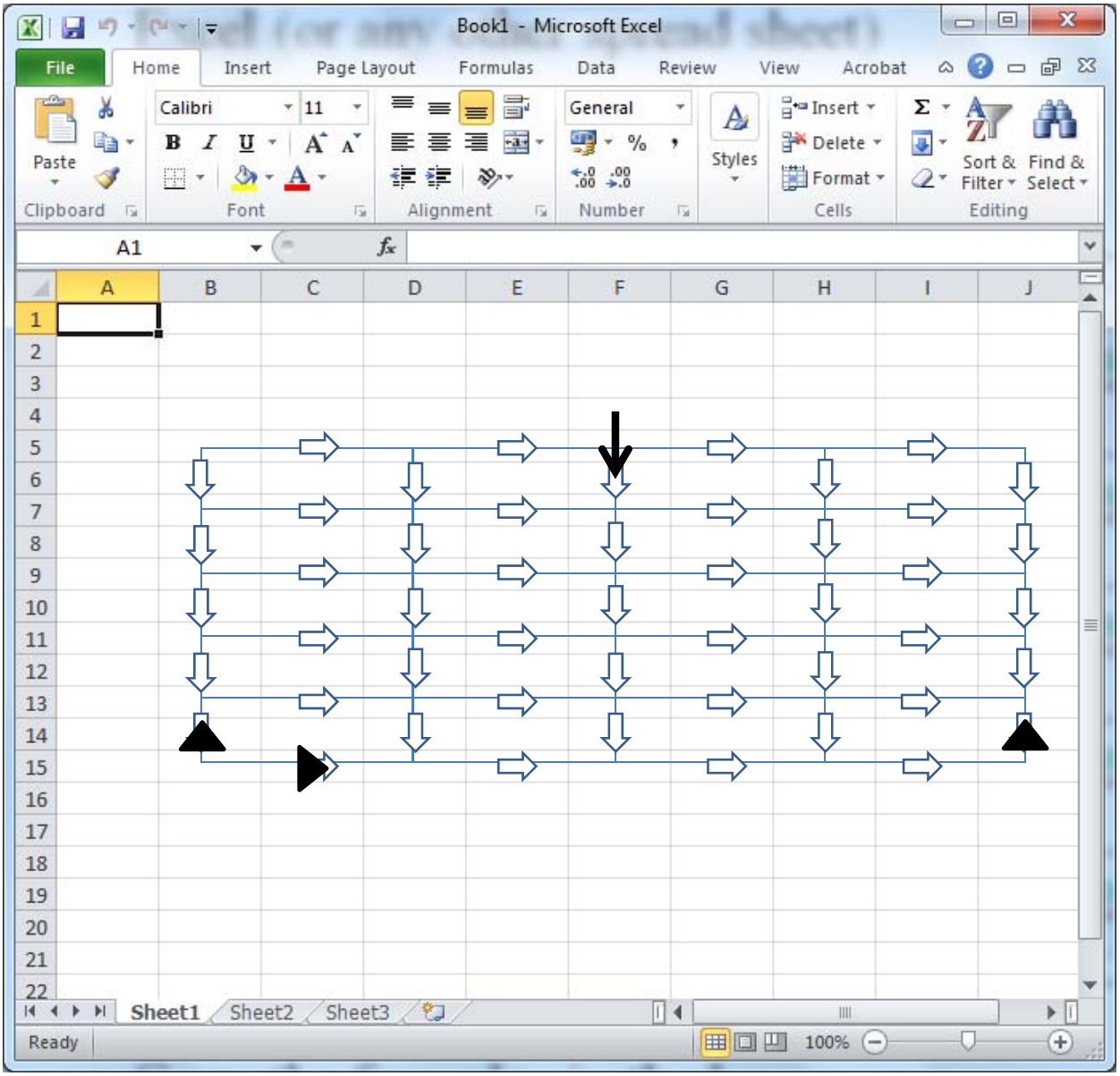

	u_x		u_x		u_x		u_x	
u_y		u_y		u_y		u_y		u_y
	u_x		u_x		u_x		u_x	
u_y		u_y		u_y		u_y		u_y
	u_x		u_x		u_x		u_x	
u_y		u_y		u_y		u_y		u_y
	u_x		u_x		u_x		u_x	
u_y		u_y		u_y		u_y		u_y
	u_x		u_x		u_x		u_x	
0		u_y		u_y		u_y		0
	0		u_x		u_x		u_x	

- Copy the formula in the boxes.
- Run 100 times or more.
- See each value change into the correct displacement values.

We also need edge molecules.

Discrete Element Method
Plates loaded in plane

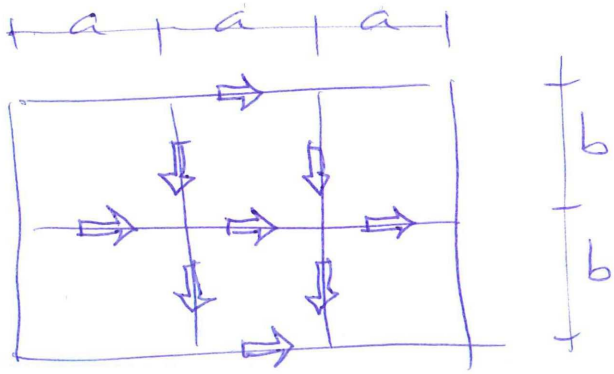

Approximation 1



extension element

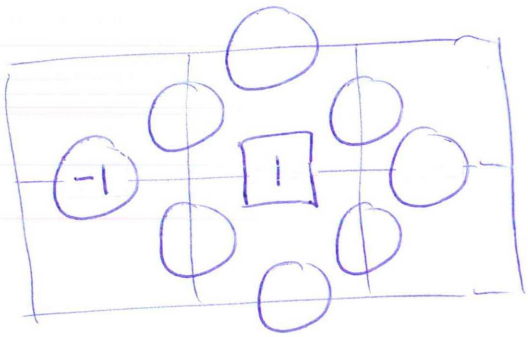

$$\begin{bmatrix} F_1 \\ F_2 \end{bmatrix} = Et\frac{b}{a}\begin{bmatrix} 1 & -1 \\ -1 & 1 \end{bmatrix}\begin{bmatrix} u_1 \\ u_2 \end{bmatrix}$$

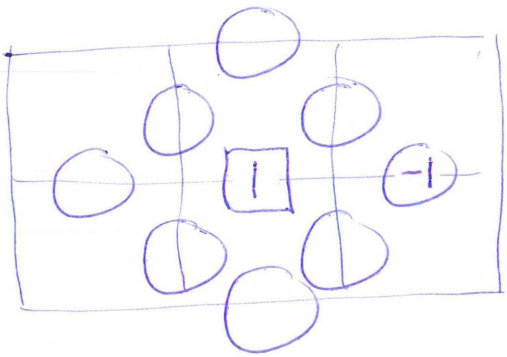

$$\begin{bmatrix} F_1 \\ F_2 \end{bmatrix} = Et\frac{b}{a}\begin{bmatrix} 1 & -1 \\ -1 & 1 \end{bmatrix}\begin{bmatrix} u_1 \\ u_2 \end{bmatrix}$$

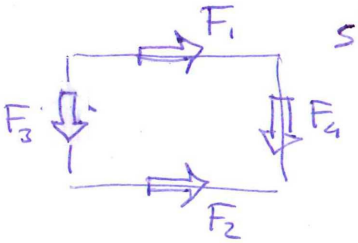

shear panel

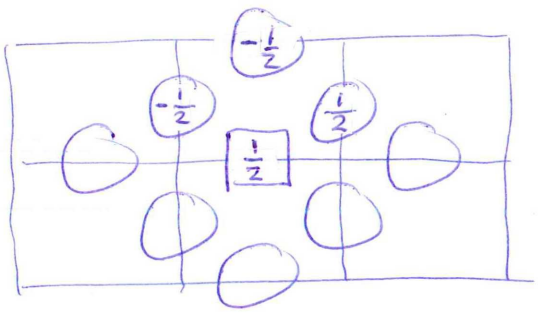

$$\begin{bmatrix} F_1 \\ F_2 \\ F_3 \\ F_4 \end{bmatrix} = Et\begin{bmatrix} \frac{b}{2a} & -\frac{b}{2a} & \frac{1}{2} & -\frac{1}{2} \\ -\frac{b}{2a} & \frac{b}{2a} & -\frac{1}{2} & \frac{1}{2} \\ \frac{1}{2} & -\frac{1}{2} & \frac{a}{2b} & -\frac{a}{2b} \\ -\frac{1}{2} & \frac{1}{2} & -\frac{a}{2b} & \frac{a}{2b} \end{bmatrix}\begin{bmatrix} u_1 \\ u_2 \\ u_3 \\ u_4 \end{bmatrix}$$

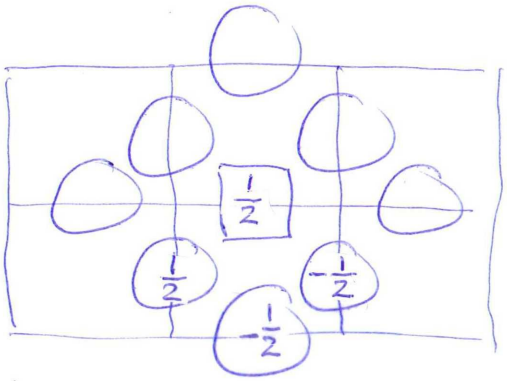

$$\begin{bmatrix} F_1 \\ F_2 \\ F_3 \\ F_4 \end{bmatrix} = Et\begin{bmatrix} \frac{b}{2a} & -\frac{b}{2a} & \frac{1}{2} & -\frac{1}{2} \\ -\frac{b}{2a} & \frac{b}{2a} & -\frac{1}{2} & \frac{1}{2} \\ \frac{1}{2} & -\frac{1}{2} & \frac{a}{2b} & -\frac{a}{2b} \\ -\frac{1}{2} & \frac{1}{2} & -\frac{a}{2b} & \frac{a}{2b} \end{bmatrix}\begin{bmatrix} u_1 \\ u_2 \\ u_3 \\ u_4 \end{bmatrix}$$

Add the discrete elements to obtain the molecules. $a=b$, $v=0$

interior molecules

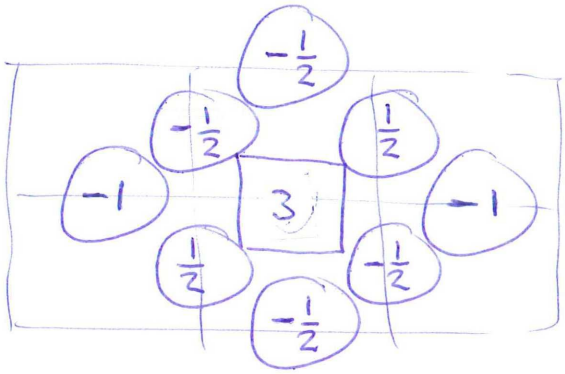

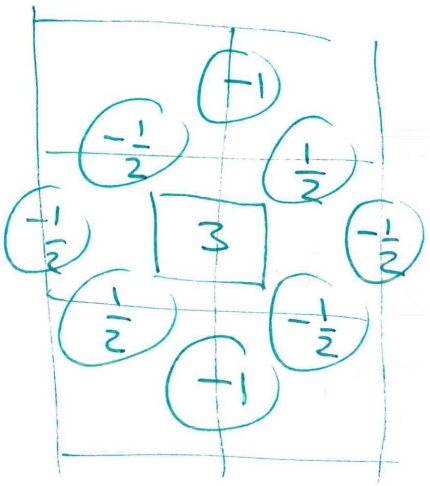

edge molecules

