Boundary conditions for slender slabs

$$D\left(\frac{\partial^4}{\partial x^4}+2\frac{\partial^4}{\partial x^2\partial y^2}+\frac{\partial^4}{\partial y^4}\right)w=p$$

Up to 4 b.c. per type

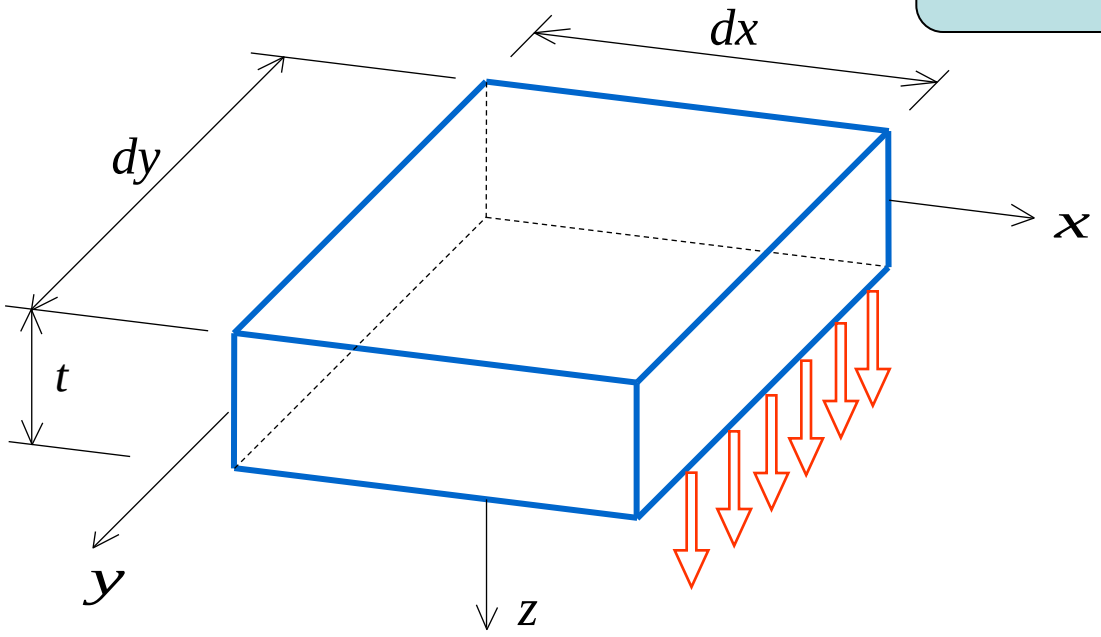

Either of :

$$w^0,\quad f_w^0$$

Boundary conditions for slender slabs

$$D\left(\frac{\partial^4}{\partial x^4}+2\frac{\partial^4}{\partial x^2\partial y^2}+\frac{\partial^4}{\partial y^4}\right)w=p$$

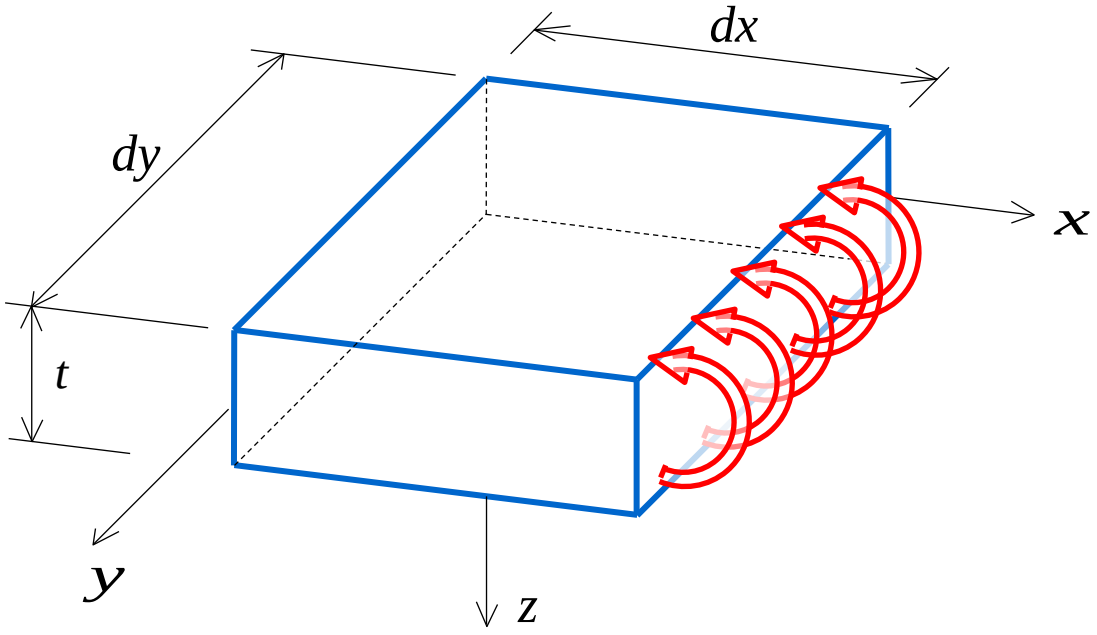

and/or either of :

$$\varphi^0,\quad f_\varphi^0$$

Boundary conditions for slender slabs

- Clamped edge

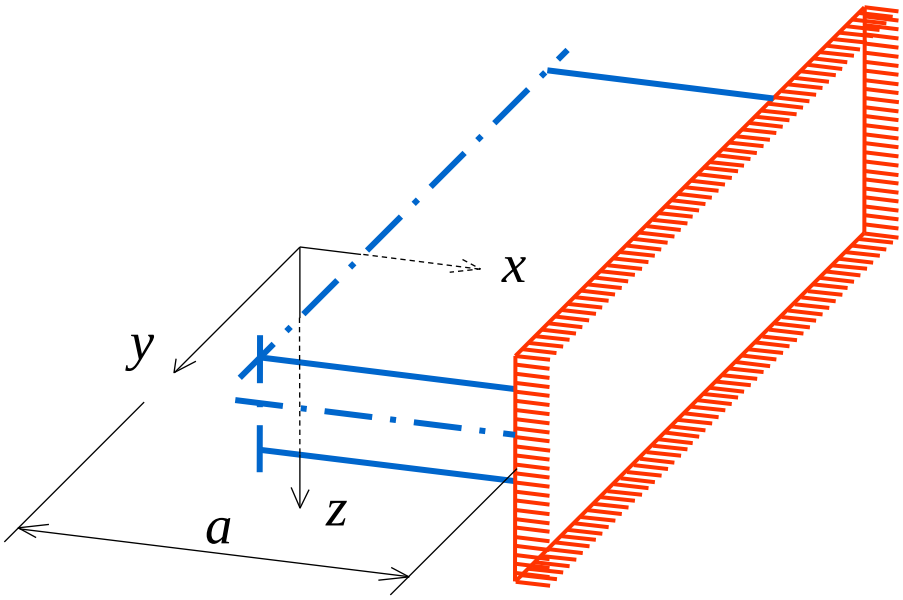

$$@\ x = a\ :\ w^0 = 0\ ;\ \varphi^0 = 0$$

Implications ?

$$\varphi^0 = -\partial w/\partial x\big|_{x=a} = 0$$

furthermore…

Boundary conditions for slender slabs

- Clamped edge

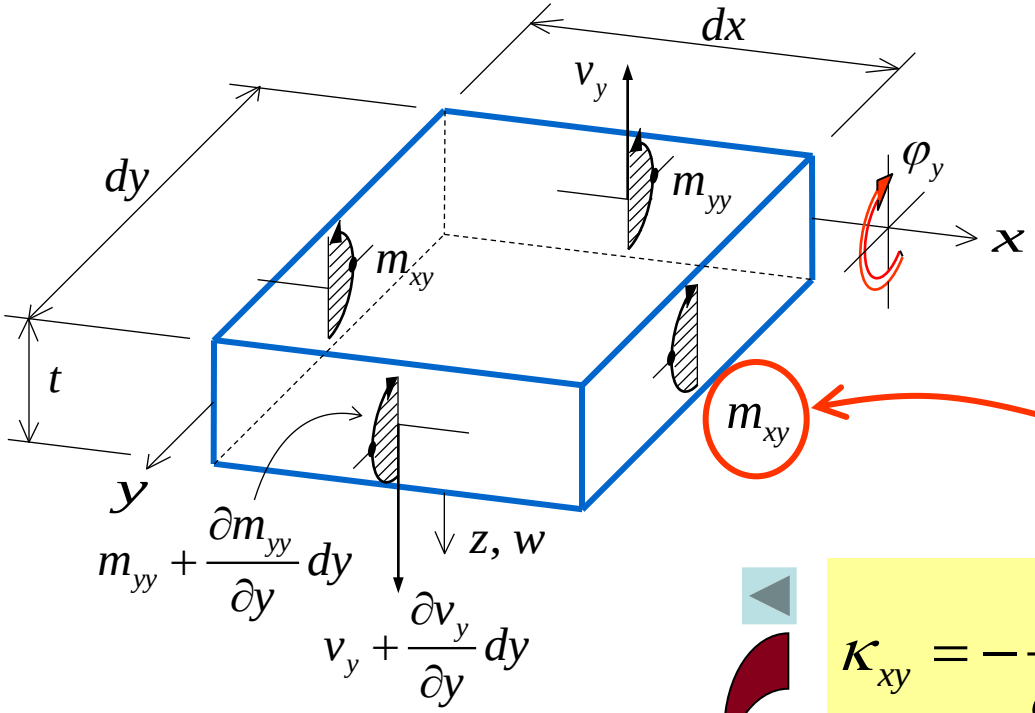

$$\varphi^0 = -\partial w/\partial x = 0$$

but then since:

$$m_{xy} = D(1-\upsilon)\kappa_{xy}$$

$$\kappa_{xy} = -\frac{\partial^2 w}{\partial x \partial y} = -\frac{\partial}{\partial y}\left(\frac{\partial w}{\partial x}\right)$$ (0)

$$m_{xy} = 0$$ hence only f_{φ_x} and f_w at x=a

Boundary conditions for slender slabs

- Clamped edge reactions

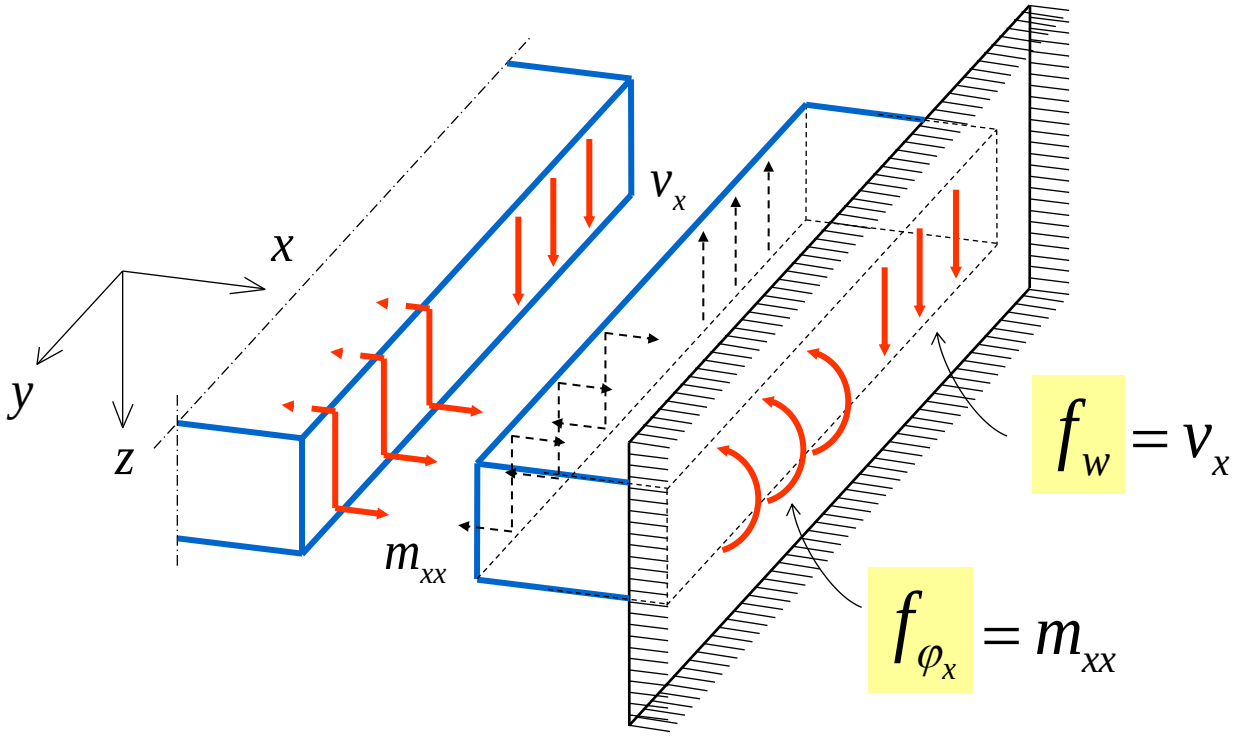

from equilibrium

Boundary conditions for slender slabs

- Simply supported edge

$\left.\frac{\partial w}{\partial x}\right|_{x\neq a}$ may vary along y which results $\frac{\partial^2 w}{\partial x \partial y} \neq 0$ and hence $m_{xy} \neq 0$

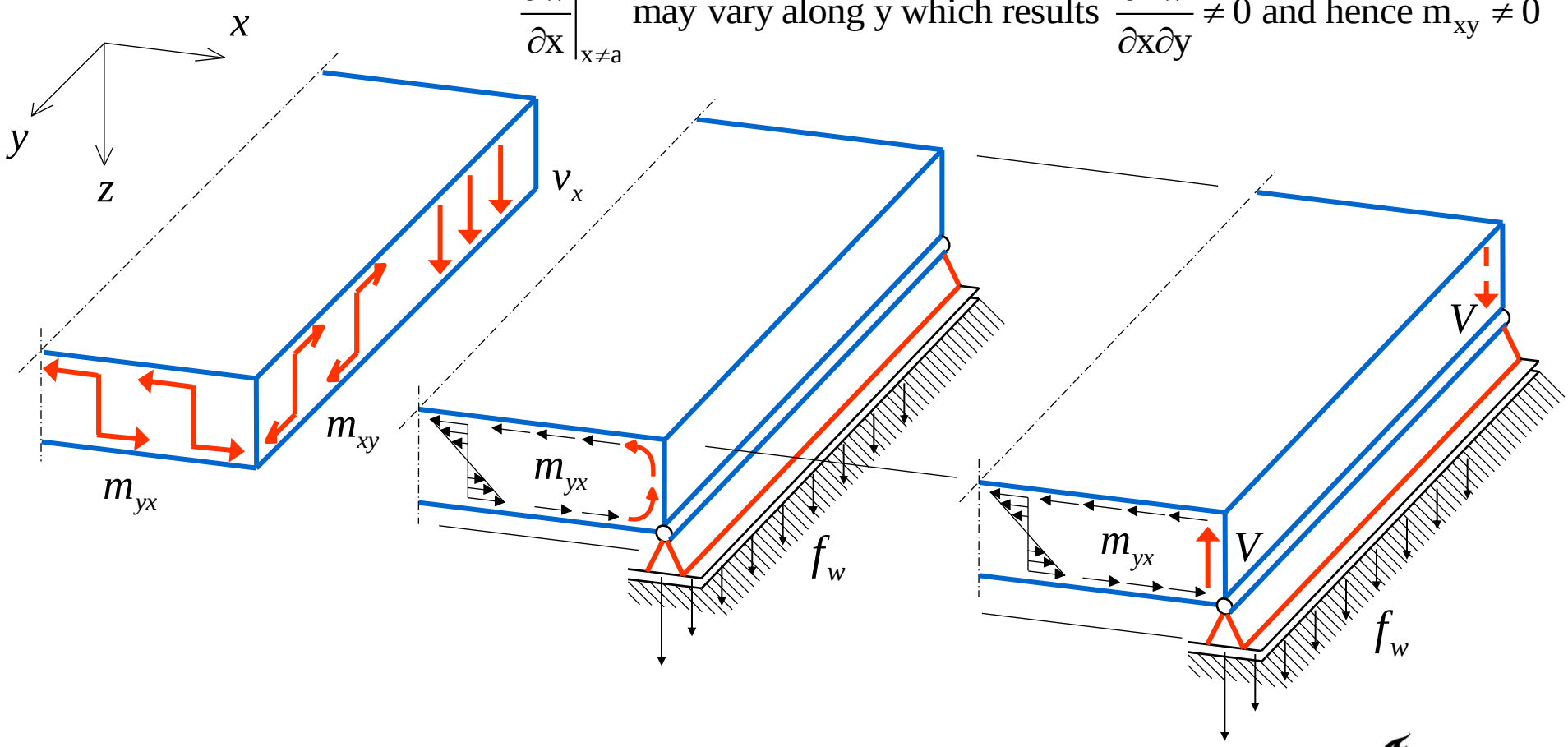

- Simply supported edge

Special case : $m_{xy} = cnt$

(*i.e.* $\partial m_{xy} / \partial y = 0$)

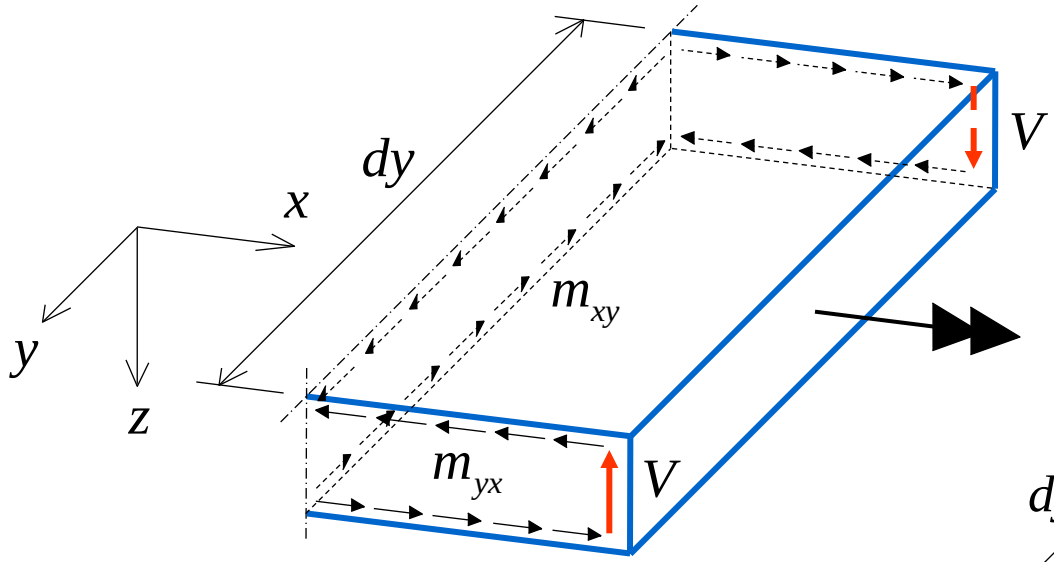

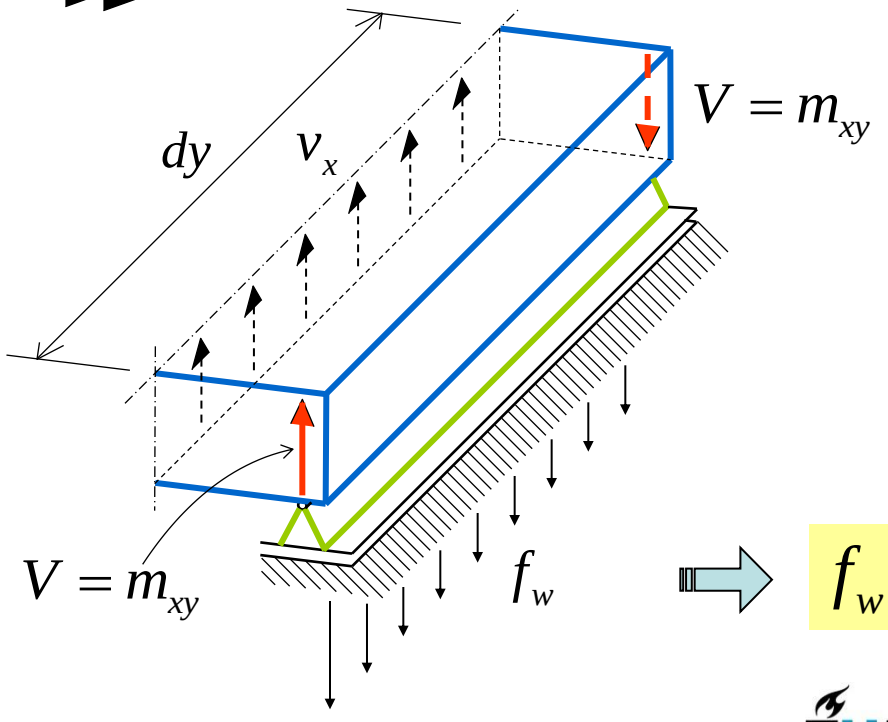

$$\sum m_x = 0 \quad : \; m_{xy}\,dy - V\,dy = 0$$

$$\Rightarrow \quad V = m_{xy}$$

$$\Rightarrow \quad f_w = v_x$$

• Simply supported edge

- general case: $\partial m_{xy} / \partial y \neq 0$

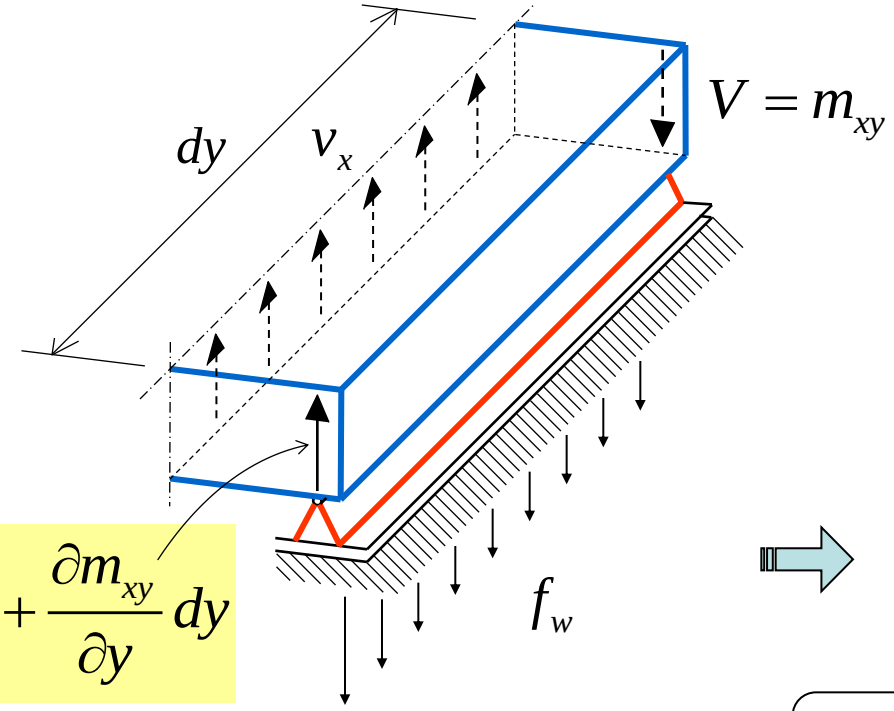

$$V = m_{xy} + \frac{\partial m_{xy}}{\partial y} dy$$

$$f_w = v_x + \frac{\partial m_{xy}}{\partial y}$$

Kirchhoff shear force

- Simply supported slab corner

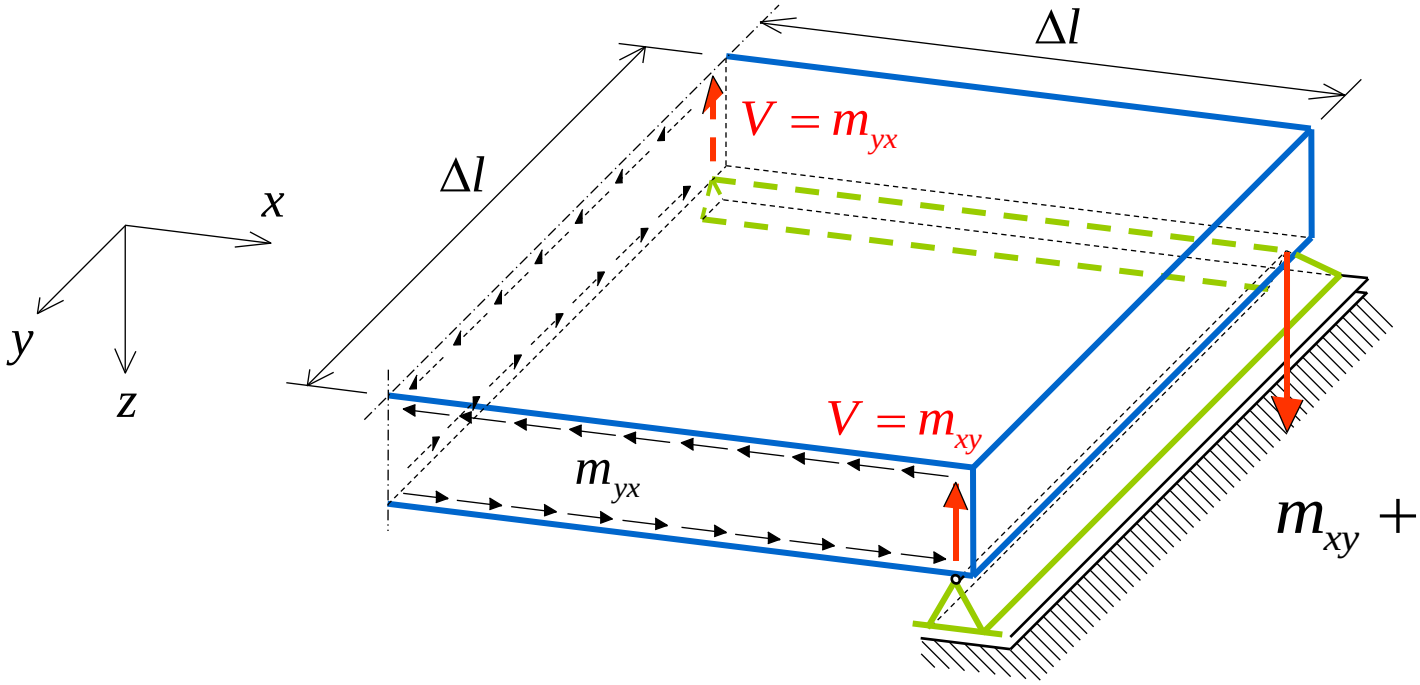

$$m_{xy} + m_{yx} = 2\,m_{xy}$$

$$m_{xy} = -(1-\upsilon)\,D\,\frac{\partial^2 w}{\partial x \partial y}$$

Boundary conditions for slender slabs

- free loaded edge

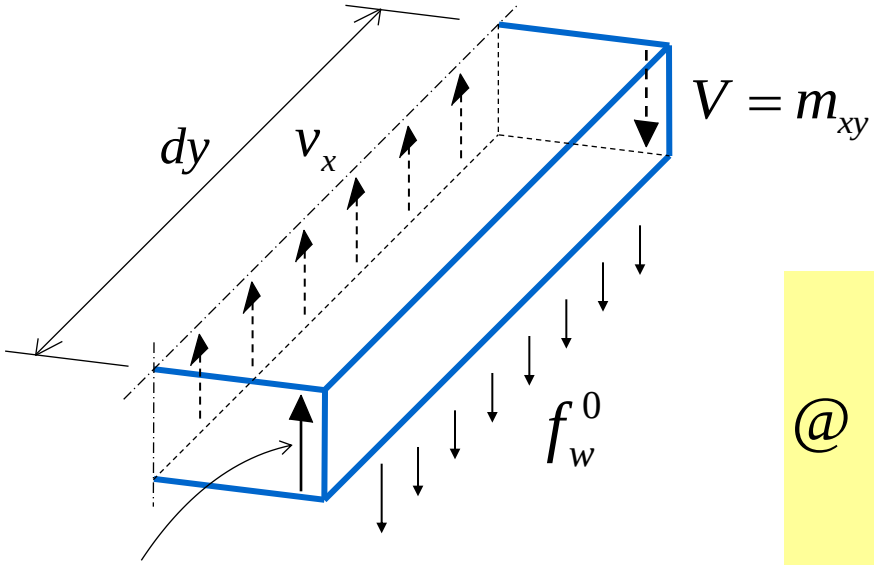

$$V = m_{xy} + \frac{\partial m_{xy}}{\partial y} dy$$

$$@ \quad x = a \quad \rightarrow \quad \begin{cases} v_x + \dfrac{\partial m_{xy}}{\partial y} = f_w^0 \\ or \quad m_{xx} = f_\varphi^0 \end{cases}$$

.....

Summary

Stress distributions inside a thin plate

