Delft University of Technology
Faculty of Civil Engineering and Geosciences
Structural Mechanics Section

Write your name and study number at the top right-hand of your work.

Exam CT5141 Theory of Elasticity
Friday 31 October 2003, 9:00 – 12:00 hours

Problem 1 (3 points)

Consider a curved beam of rectangular cross-section (Figure 1). The beam is loaded by a moment *M*. The normal stress $\sigma_{\theta\theta}$ in a cross-section can be derived as.

$$\sigma_{\theta\theta} = -\tfrac{1}{2} E \varepsilon_i f_{\theta\theta} ,$$

where

$$f_{\theta\theta} = 1 - \frac{ab}{b^2 - a^2}\frac{ab}{r^2} ln\frac{b}{a} - \frac{a^2}{b^2 - a^2} ln\frac{r}{a} + \frac{b^2}{b^2 - a^2} ln\frac{r}{b}$$

The moment in the cross-section can be derived as

$$M = -\tfrac{1}{2} E t \varepsilon_i C ,$$

where

$$C = -\tfrac{1}{4}(b^2 - a^2) + \frac{a^2 b^2}{b^2 - a^2}\left(ln\frac{b}{a} \right)^2 .$$

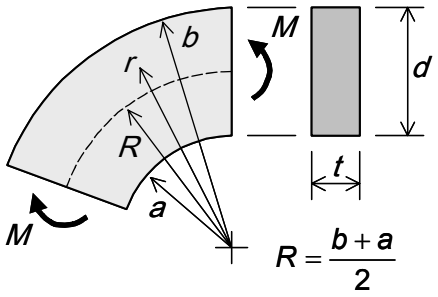

Figure 1. Curved beam

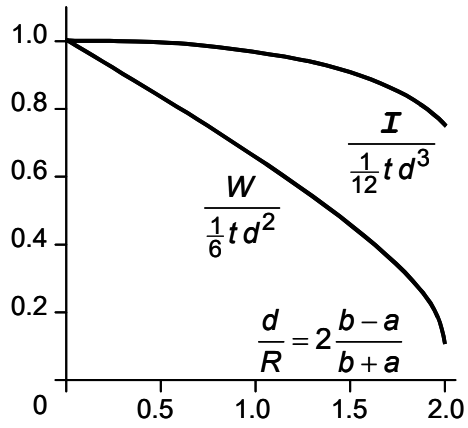

Figure 2. Functions *W* and ***I***

a Derive the formula for the elastic section modulus *W* (Dutch: weerstandsmoment).

$$\sigma_{\theta\theta max} = \frac{M}{W}$$

b Derive the formula for the moment of inertia ***I*** (Dutch: traagheidsmoment).

$$M = E \boldsymbol{I} \kappa$$

(Note that curvature κ is the change of rotation of the cross-sections per arch length.).

c The derived formulas *W* and ***I*** have been plotted in Figure 2. Both *W* and ***I*** can be approximated by the formulas for straight beams. Is this approximation safe or unsafe? Consider for this both the serviceability limit state and the ultimate limit state of the structural component.

d The hypothesis of Bernoulli states that plane cross-sections remain plane during bending. Is this hypothesis correct for curved beams?

Problem 2 (2 points)

Traditional timber floors consist of beams and floorboards (Dutch: vloerdelen). In this problem the deflection of such a floor is calculated. One of the beams carries a line load q [kN/m] (Figure 3). The floorboards transfer part of this load to the adjacent beams. The contribution of other beams is neglected, so only three beams are included in the structural model. The Young's modulus is E and the moment of inertia of the beams is $\boldsymbol{I}$. The boards have a thickness t.

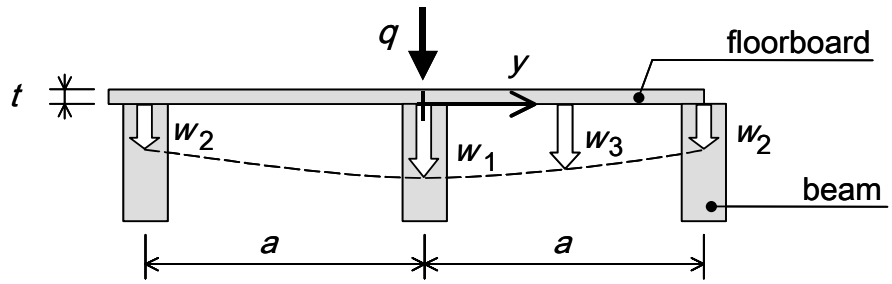

Figure 3. Cross-section of a timber floor

We assume a deflection function w_1 for the middle beam, a deflection function w_2 for both adjacent beams and a deflection function w_3 for the boards.

$$w_1 = \hat{w}_1 + C_1 \frac{x^2}{l^2} + C_2 \frac{x^4}{l^4}$$

$$w_2 = \hat{w}_2 + C_3 \frac{x^2}{l^2} + C_4 \frac{x^4}{l^4}$$

$$w_3 = w_1 + C_5 \frac{y^2}{a^2} + C_6 \frac{y^3}{a^3}$$

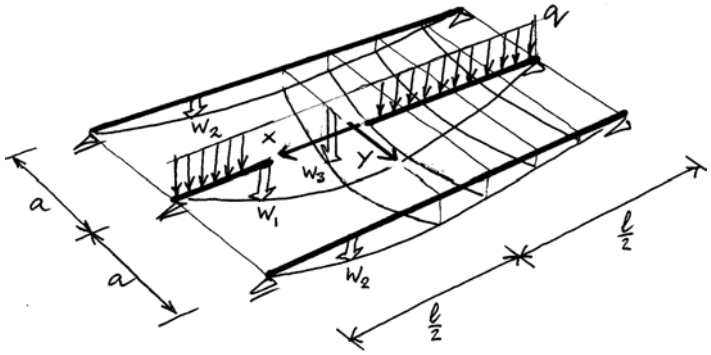

Figure 4. Structural model of a timber floor

a What is the interpretation of variables $\hat{w}_1$ and $\hat{w}_2$. Formulate the kinematic boundary conditions of the deflection functions. Which of these boundary conditions are already satisfied? Show that the boundary conditions can be used to solve the following coefficients.

$$C_1 = -4\,\hat{w}_1 - \tfrac{1}{4} C_2$$

$$C_3 = -4\,\hat{w}_2 - \tfrac{1}{4} C_4$$

$$C_5 = w_2 - w_1 - C_6$$

b Formulate the potential energy of the floor. Write it such that it can be evaluated by a mathematical computer program.

Kinematic Equations

$$\kappa_1 = -\frac{d^2 w_1}{dx^2} \qquad \kappa_2 = -\frac{d^2 w_2}{dx^2} \qquad \kappa_3 = -\frac{d^2 w_3}{dy^2}$$

Constitutive Equations

$$M_1 = E\boldsymbol{I}\,\kappa_1 \qquad M_2 = E\boldsymbol{I}\,\kappa_2 \qquad m_3 = E\tfrac{1}{12} t^3\,\kappa_3$$

c The result of the computer evaluation is a large function of the following variables.

$$E_{\text{pot}} = E_{\text{pot}}(l, a, t, E, \boldsymbol{I}, q, \hat{w}_1, \hat{w}_2, C_2, C_4, C_6)$$

With respect to which variables needs the potential energy be minimal? How are the equations derived from which the deflection can be solved?

d The computer solves the deflection as

$$\hat{w}_1 = \frac{5}{384}\frac{q l^4}{E\boldsymbol{I}}\frac{95256 + 263970\,\beta + 14375\,\beta^2}{95256 + 784350\,\beta + 43125\,\beta^2}$$

where

$$\beta = \frac{1}{1000}\frac{t^3 l^4}{a^3 \boldsymbol{I}}$$

The formula can be simplified with very little loss of accuracy to

$$\hat{w}_1 = \frac{5}{384}\frac{q l^4}{E\boldsymbol{I}}\frac{10 + 28\,\beta}{10 + 84\,\beta}$$

Can this result be improved by using better approximations of the deflection functions?

Problem 3 (3 points)

A concrete offshore platform has a central shaft with a five-cell cross-section (Figure 5). The thickness of each wall is t, which is much smaller than the radius R of the cells. The membrane analogy will be used to determine the torsion properties. Due to rotation symmetry just two cells need to be considered in the calculations. A_1 and A_2 are the cross-section areas of these cells. O_1 and O_2 are the circumferences of these cells. The following relations apply

$$A_1 = \pi R^2$$
$$A_2 = (4 - \pi)R^2$$
$$O_1 = 2\pi R$$
$$O_2 = 2\pi R\,.$$

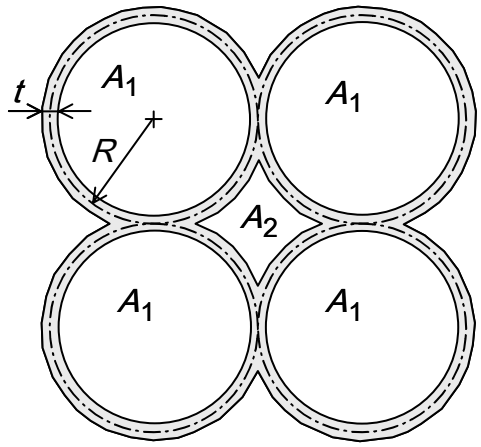

Figure 5. Cross-section of a offshore platform shaft

a Formulate the equations from which the displacements w_1 and w_2 of the floating plates can be solved. You do not need to solve these equations.

The solution of the equations is

$$w_1 = \frac{pRt}{S}\frac{3\pi + 4}{6\pi}$$
$$w_2 = \frac{pRt}{S}\frac{8}{3\pi}.$$

b Calculate the torsion stiffness of the cross-section.

c Calculate the shear stresses in the walls. Make a simple drawing of the cross-section and draw the shear stresses in the correct directions.

Problem 4 (2 points)

Consider an axial symmetrical plate loaded in bending. Derive the following equilibrium equation.

$$-\frac{d^2(r\,m_{rr})}{dr^2} + \frac{dm_{\theta\theta}}{dr} = r\,p$$

Exam CT5141, 31 October 2003
Answers to Problem 1

a Section Modulus

In the lecture book $f_{\theta\theta}$ has been plotted. From this we observe that the extreme value occurs at $r = a$.

$$f_{\theta\theta\max} = 1 - \frac{ab}{b^2-a^2}\frac{ab}{a^2}ln\frac{b}{a} - \frac{a^2}{b^2-a^2}ln\frac{a}{a} + \frac{b^2}{b^2-a^2}ln\frac{a}{b}$$
$$= 1 - \frac{b^2}{b^2-a^2}ln\frac{b}{a} - 0 + \frac{b^2}{b^2-a^2}ln\frac{a}{b}$$
$$= 1 - \frac{b^2}{b^2-a^2}ln\frac{b}{a} - 0 + \frac{b^2}{b^2-a^2}ln\left(\frac{b}{a}\right)^{-1}$$
$$= 1 - \frac{b^2}{b^2-a^2}ln\frac{b}{a} - 0 - \frac{b^2}{b^2-a^2}ln\frac{b}{a}$$
$$= 1 - 2\frac{b^2}{b^2-a^2}ln\frac{b}{a}$$

$$W = \frac{M}{\sigma_{\theta\theta\max}} = \frac{-\frac{1}{2}Et\varepsilon_i C}{-\frac{1}{2}E\varepsilon_i f_{\theta\theta\max}} = \frac{tC}{f_{\theta\theta\max}} = t\frac{-\frac{1}{4}(b^2-a^2) + \frac{a^2b^2}{b^2-a^2}\left(ln\frac{b}{a}\right)^2}{1 - 2\frac{b^2}{b^2-a^2}ln\frac{b}{a}}$$

$$\boxed{W = t\frac{-\frac{1}{4}(b^2-a^2)^2 + a^2b^2\left(ln\frac{b}{a}\right)^2}{b^2-a^2-2b^2 ln\frac{b}{a}}}$$

b Moment of Inertia

Curvature is change of rotation over arch length.

$$\kappa = \frac{\varphi_i}{\frac{1}{2}(a+b)\varphi} = \frac{2\varepsilon_i}{a+b}$$

$$\boldsymbol{I} = \frac{M}{E\kappa} = \frac{-\frac{1}{2}Et\varepsilon_i C}{E\frac{2\varepsilon_i}{b+a}} = -\frac{1}{4}tC(b+a) = -\frac{1}{4}t\left(-\frac{1}{4}(b^2-a^2) + \frac{a^2b^2}{b^2-a^2}\left(ln\frac{b}{a}\right)^2\right)(b+a)$$

$$\boxed{\boldsymbol{I} = \frac{1}{4}t\left(\frac{1}{4}(b-a)(b+a)^2 - \frac{a^2b^2}{b-a}\left(ln\frac{b}{a}\right)^2\right)}$$

c Approximation

In the serviceability limit state the deformation is important. Since the approximated $\boldsymbol{I}$ is too large the displacements will be too small. Therefore the approximation of $\boldsymbol{I}$ is unsafe.

In the ultimate limit state the stresses are important. Since the approximated W is too large the calculated stresses will be too small. Therefore the approximation of W is unsafe.

d Hypothesis

The initial strain ε_i produces plane rotations of the cross-sections. Therefore, the hypothesis is correct for curved beams.

Encore (not an exam question)

The first two non zero terms of the Taylor expansion of W to $d = b - a$ are

$$\boxed{W \approx \frac{1}{6} t d^2 - \frac{1}{18} t \frac{d^3}{R}}.$$

The first two non zero terms of the Taylor expansion of $\boldsymbol{I}$ to d are

$$\boxed{\boldsymbol{I} \approx \frac{1}{12} t d^3 - \frac{1}{365} t \frac{d^5}{R^2}}.$$

These approximations have an error less than 2 % for $d < R$ (Figure 6).

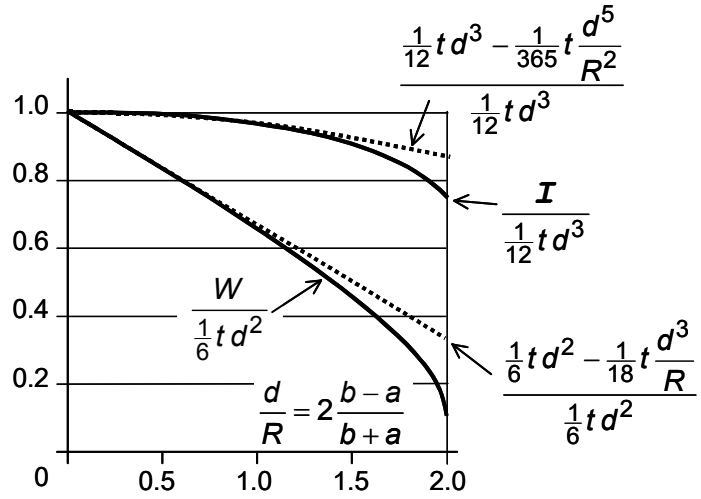

Figure 6. Functions W, $\boldsymbol{I}$ and their approximations

Answers to Problem 2 [1]

a Kinematic Boundary Conditions

The variables $\hat{w}_1$ and $\hat{w}_2$ are the maximum deflections that occur in the middle of beam 1 and 2 respectively. The boundary conditions are

1 $\quad x = \frac{1}{2} l \quad \rightarrow \quad w_1 = 0$

2 $\quad x = -\frac{1}{2} l \quad \rightarrow \quad w_1 = 0$

3 $\quad x = \frac{1}{2} l \quad \rightarrow \quad w_2 = 0$

[1] This problem has been proposed by Dr. Linh Cao Hoang, COWI Consult Denmark

4 $x = -\frac{1}{2}l \quad \rightarrow \quad w_2 = 0$

5 $y = 0 \quad \rightarrow \quad w_3 = w_1$

6 $y = a \quad \rightarrow \quad w_3 = w_2$

7 $y = 0 \quad \rightarrow \quad \frac{\partial w_3}{\partial y} = 0$

The deflection functions are such that the boundary conditions 2, 4, 5 and 7 are already satisfied.

1 $x = \frac{1}{2}l \rightarrow \quad 0 = \hat{w}_1 + C_1\frac{1}{4} + C_2\frac{1}{16} \rightarrow \quad C_1 = -4\hat{w}_1 - \frac{1}{4}C_2$

3 $x = \frac{1}{2}l \rightarrow \quad 0 = \hat{w}_2 + C_3\frac{1}{4} + C_4\frac{1}{16} \rightarrow \quad C_3 = -4\hat{w}_2 - \frac{1}{4}C_4$

6 $y = a \rightarrow \quad w_2 = w_1 + C_5 + C_6 \rightarrow \quad C_5 = w_2 - w_1 - C_6$

b Potential Energy

$$E_{\text{pot}} = \int_{x=-\frac{1}{2}l}^{\frac{1}{2}l} \frac{1}{2}M_1\kappa_1 dx + 2\int_{x=-\frac{1}{2}l}^{\frac{1}{2}l} \frac{1}{2}M_2\kappa_2 dx + \int_{x=-\frac{1}{2}l}^{\frac{1}{2}l} 2\int_{y=0}^{a} \frac{1}{2}m_3\kappa_3 dy dx - \int_{x=-\frac{1}{2}l}^{\frac{1}{2}l} qw_1 dx$$

c Minimal

The potential energy needs to be minimal with respect to the parameters that describe the deformation, $\hat{w}_1, \hat{w}_2, C_2, C_4, C_6$. The equations are derived from

$$\frac{\partial E_{\text{pot}}}{\partial \hat{w}_1} = 0, \qquad \frac{\partial E_{\text{pot}}}{\partial \hat{w}_2} = 0, \qquad \frac{\partial E_{\text{pot}}}{\partial C_2} = 0, \qquad \frac{\partial E_{\text{pot}}}{\partial C_4} = 0, \qquad \frac{\partial E_{\text{pot}}}{\partial C_6} = 0.$$

d Improved

De interaction between floorboards and beam is not a constant force over the beam length. Therefore, fourth order polynomials are not sufficient to describe the exact deflection of the beams. So, the solution is not exact and in theory it can be improved.

Encore (not an exam problem)

The deflection functions can be extended

$$w_1 = \hat{w}_1 + C_1\frac{x^2}{l^2} + C_2\frac{x^4}{l^4} + C_7\frac{x^6}{l^6}$$

$$w_2 = \hat{w}_2 + C_3\frac{x^2}{l^2} + C_4\frac{x^4}{l^4} + C_8\frac{x^6}{l^6}$$

$$w_3 = w_1 + C_5\frac{y^2}{a^2} + C_6\frac{y^3}{a^3}$$

The calculated maximum deflection is now

$$\hat{w}_1 = \frac{5}{384}\frac{q l^4}{EI}\frac{5394156768 + 15254953560\beta + 1807186500\beta^2 + 6640625\beta^3}{5394156768 + 44820329400\beta + 5417212500\beta^2 + 19921875\beta^3}$$

The approximated formula

$$\boxed{\hat{w}_1 = \frac{5}{384}\frac{q l^4}{EI}\frac{10+28\beta}{10+84\beta}}$$

shows a deviation between –0.4 % and 0.4 % for all values of β.

Answers to Problem 3

a Constitutive Equations

We assume that plate 2 has a higher altitude than plate 1.

Vertical equilibrium of plate 1. $p A_1 - S\frac{w_1}{t}\frac{3}{4}O_1 + S\frac{w_2 - w_1}{t}\frac{1}{4}O_1 = 0$

Vertical equilibrium of plate 2. $p A_2 - S\frac{w_2 - w_1}{t}O_2 = 0$

This can be evaluated to

$$\boxed{\begin{aligned} &p\pi R^2 - S\frac{w_1}{t}\frac{3}{4}2\pi R + S\frac{w_2 - w_1}{t}\frac{1}{4}2\pi R = 0 \\ &p(4-\pi)R^2 - S\frac{w_2 - w_1}{t}2\pi R = 0 \end{aligned}}$$

The solution of these equations has been provided.

$$w_1 = \frac{pRt}{S}\frac{3\pi+4}{6\pi}$$
$$w_2 = \frac{pRt}{S}\frac{8}{3\pi}$$

b Torsion Stiffness

From the membrane the ϕ-bubble is obtained using the following substitutions

$$w = \phi \qquad p = 2\theta \qquad S = \frac{1}{G}.$$
$$\phi_1 = 2\theta G Rt\frac{3\pi+4}{6\pi}$$
$$\phi_2 = 2\theta G Rt\frac{8}{3\pi}$$

The torsion moment is two times the volume of the ϕ-bubble.

$$\begin{aligned} M_t &= 2(4\phi_1 A_1 + \phi_2 A_2) \\ &= 2\left(4 \times 2\theta G Rt\frac{3\pi+4}{6\pi}\pi R^2 + 2\theta G Rt\frac{8}{3\pi}(4-\pi)R^2\right) \\ &= G R^3 t\theta\left(8\pi + \frac{128}{3\pi}\right) \end{aligned}$$

For a wire frame model of the shaft we write

$$M_t = G I_t \theta .$$

Therefore the torsion stiffness is

$$\boxed{G\boldsymbol{I}_t = G R^3 t\left(8\pi + \frac{128}{3\pi}\right)}.$$

c Shear Stresses

The shear stress is the slope of the ϕ–bubble. First we rewrite the formula for the torsion moment

$$G R t\theta = \frac{3\pi}{24\pi^2 + 128}\frac{M_t}{R^2}$$

and express ϕ_1 and ϕ_2 in the torsion moment.

$$\phi_1 = 2\frac{3\pi}{24\pi^2 + 128}\frac{M_t}{R^2}\frac{3\pi + 4}{6\pi} = \frac{3\pi + 4}{24\pi^2 + 128}\frac{M_t}{R^2}$$
$$\phi_2 = 2\frac{3\pi}{24\pi^2 + 128}\frac{M_t}{R^2}\frac{8}{3\pi} = \frac{16}{24\pi^2 + 128}\frac{M_t}{R^2}$$

The shear stresses are

$$\sigma_1 = \frac{\phi_1}{t} \qquad \boxed{\sigma_1 = \frac{3\pi + 4}{24\pi^2 + 128}\frac{M_t}{t R^2}}$$

$$\sigma_2 = \frac{\phi_2 - \phi_1}{t} = \frac{\frac{16}{24\pi^2 + 128}\frac{M_t}{R^2} - \frac{3\pi + 4}{24\pi^2 + 128}\frac{M_t}{R^2}}{t} \qquad \boxed{\sigma_2 = \frac{12 - 3\pi}{24\pi^2 + 128}\frac{M_t}{t R^2}}.$$

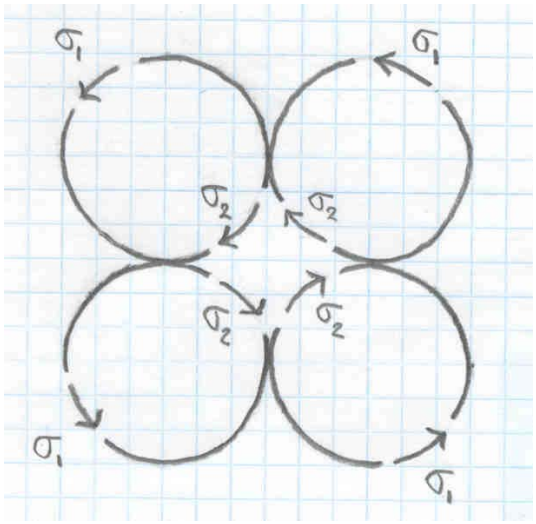

Answer to Problem 4

Vertical equilibrium

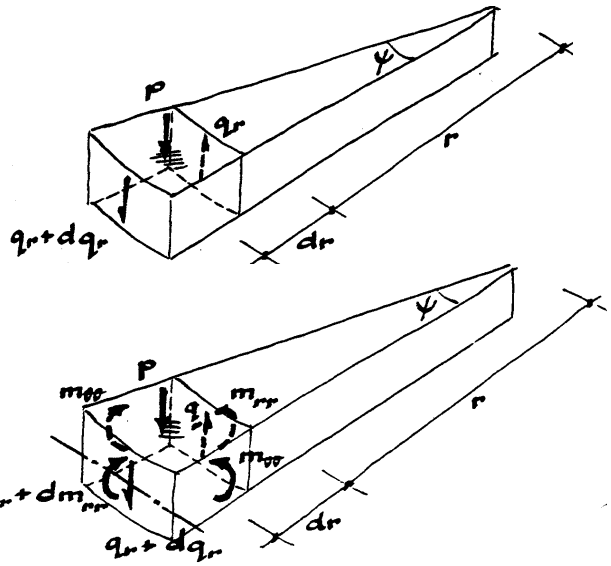

$$p\,dr\,\varphi r = q_r\,\varphi r - (q_r + dq_r)(r + dr)\varphi$$

$$p\,dr\;r = q_r\,r - q_r(r + dr) - dq_r(r + dr)$$

$$p\,dr\;r = q_r\,r - q_r\,r - q_r\,dr - dq_r\,r - dq_r\,dr$$

$$p\,dr\;r = -q_r\,dr - dq_r\,r - dq_r\,dr$$

$$p\,r = -q_r - r\frac{dq_r}{dr} - dq_r$$

$$p\,r = -q_r - r\frac{dq_r}{dr}$$

$$pr = -\frac{d}{dr}(r\,q_r) \qquad (1)$$

Moment equilibrium

$$0 = (m_{rr} + dm_{rr})\varphi(r + dr) - m_{rr}\,\varphi r + p\,dr\,\varphi r\frac{dr}{2} - q_r\varphi r\,dr - 2\,m_{\theta\theta}\,dr\frac{\varphi}{2}$$

$$0 = (m_{rr} + dm_{rr})(r + dr) - m_{rr}\;r + p\,dr\;r\frac{dr}{2} - q_r\,r\,dr - 2\,m_{\theta\theta}\,dr\frac{1}{2}$$

$$0 = m_{rr}(r + dr) + dm_{rr}\,(r + dr) - m_{rr}\;r + p\,dr\;r\frac{dr}{2} - q_r\,r\,dr - 2\,m_{\theta\theta}\,dr\frac{1}{2}$$

$$0 = m_{rr}\,r + m_{rr}\,dr + dm_{rr}\,r + dm_{rr}\,dr - m_{rr}\;r + p\,dr\;r\frac{dr}{2} - q_r\,r\,dr - 2\,m_{\theta\theta}\,dr\frac{1}{2}$$

$$0 = m_{rr}\,dr + dm_{rr}\,r + dm_{rr}\,dr + p\,dr\;r\frac{dr}{2} - q_r\,r\,dr - 2\,m_{\theta\theta}\,dr\frac{1}{2}$$

$$0 = m_{rr} + \frac{dm_{rr}}{dr}r + dm_{rr} + p\;r\frac{dr}{2} - q_r\,r - m_{\theta\theta}$$

$$0 = m_{rr} + \frac{dm_{rr}}{dr}r - q_r\,r - m_{\theta\theta}$$

$$0 = \frac{d(r\,m_{rr})}{dr} - q_r\,r - m_{\theta\theta} \qquad (2)$$

Substitution of (2) in (1) gives

$$pr = -\frac{d^2(r\,m_{rr})}{dr^2} + \frac{d}{dr}m_{\theta\theta}\,.$$

Q. E. D.