Delft University of Technology
Faculty of Civil Engineering and Geosciences
Structural Mechanics Section

Write your name and study number at the top right-hand of your work.

Exam CT5143 Stresses in Shells
Monday 27 August 2007, 14:00 – 17:00 hours

Problem 1 (2.5 point, 45 minutes)

Explain shortly the meaning of the following eight words in relation to structural shells.

Membrane forces
Concentrated shear force
Koiter
Funicular
Middle-third rule
Folded plate
Brazier effect
Hyperboloid

Problem 2 (2.5 points, 45 minutes)

a Figure 1 shows a representative shell part with forces and moments in the positive directions. Add to this figure the variables for the directions, forces and moments (for example x, n_{xx} , ... Make clear which variable belongs to which arrow.)

b The shell equations are valid for small displacements only. Which specific equations are not accurate for large rigid body translations? How can they be improved?

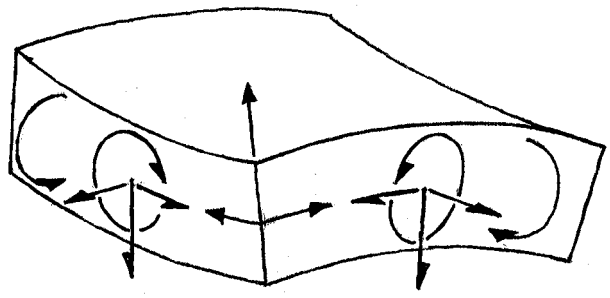

Figure 1. Representative shell part

c Some people expressed doubts about the shell-differential equation; “The eighth derivative of any physical quantity cannot be important because it is almost impossible to measure accurately”. Nevertheless, how do we know that the shell differential equation is correct?

d Do we use different equations for buckling of shells than we use for linear analysis of shells? Explain your answer.

Problem 3 (2.5 points, 45 minutes)

A pipe can be modelled with 1D, 2D and 3D finite elements (Fig. 2).

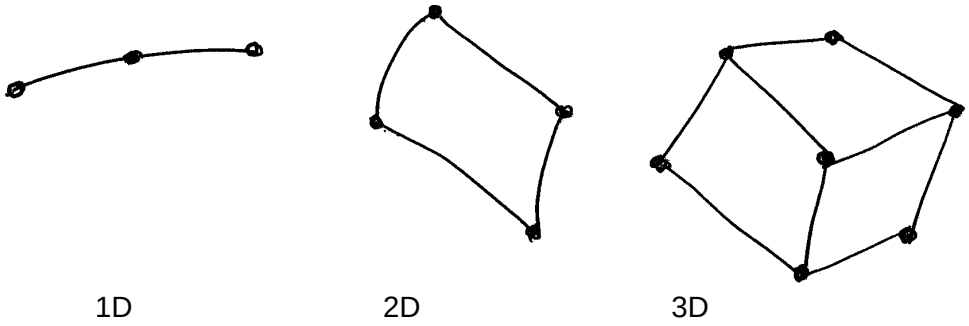

Figure 2. Different elements that can be used

a Which type of element is suitable for modelling the process of laying a 3 km pipe line? Explain your answer.

b Which type of element is suitable for calculating the stresses in a section of a 10 m pipe? Explain your answer.

c Which type of element is suitable for calculating the contact stresses between the pipe and a support? Explain your answer.

Problem 4 (2.5 points, 45 minutes)

An assembly of four identical hypar shells is supported by two columns (Fig. 3). The shell thickness is t = 70 mm. The length and width of the structure is 9 m. The sagitta is 2 m. The dead weight of the shell including roofing and finishing is p = 3.3 kN/m^2.

a Calculate the membrane forces and largest bending moment in the shell.

b Calculate the forces in the edge beams, interior beams, tension rod and columns.

c Suppose the architect does not like the tension rod. Make an alternative design without the tension rod.

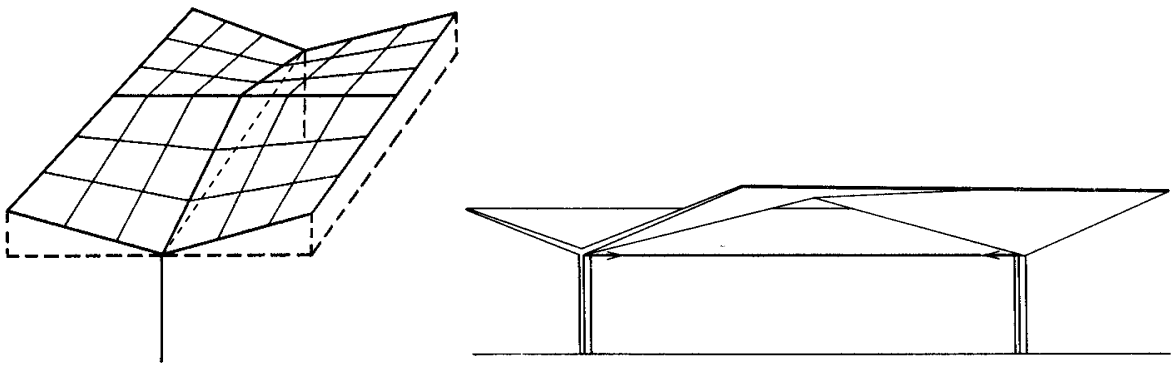

Figure 3. Four hypar shell

Exam CT5143, 27 August 2007
Solution of Problem 1

Membrane forces ……..	Distributed forces n_{xx}, n_{yy}, n_{xy} due to extension
Concentrated shear force …	Out of plane shear force m_{xy} in shell edges
Koiter ……..	Author on the subjects of stability and shells
Funicular ……..	Shape of a chain hanging between two points
Middle-third rule ……..	If the resultant force on a cross-section is within the middle-third of the thickness there will be no tensile stresses in this cross-section.
Folded plate roof ..……	Roof made of flat plates that are attached at angles
Brazier effect	When a circular tube is bent the cross-section is flattened; this is called the Brazier effect.
Hyperboloid ……..	Shape of a cooling tower

Solution of Problem 2

a Variables

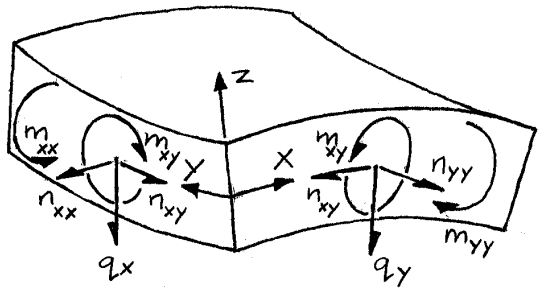

b The following kinematic equations give strains for rigid body translations

$$\kappa_{xx} = -u_{z,xx}$$
$$\kappa_{yy} = -u_{z,yy}$$

The following adaptation would fix this

$$\kappa_{xx} = -u_{z,xx} - u_z k_x^2$$
$$\kappa_{yy} = -u_{z,yy} - u_z k_y^2$$

c By comparison of its solutions with experiments.

Encore (not an exam question)
The shell differential equation is not as exceptional as one might think because the load is also differentiated four times. Therefore, the displacement is differentiated (8-4=) four times more than the load, just as the differential equation of a beam.

d Yes, in buckling analysis the displacement is included in the equilibrium equation of the *z* direction.

Solution of Problem 3

a If we would model a 3 km pipe line with 2D or 3D elements the number of dofs (degrees of freedom) would become far to much for most computers. In addition the computation time would become very large. Therefore, only 1D elements are practically possible.

b 1D elements and 2D elements are practically possible. 2D elements give more accurate results but it will probably take more time to draw the model for these elements. Also the output of these element types will be different; use 1D elements if you want to see a moment distribution and use 2D elements if you want to see stresses.

c Only 3D elements have stresses perpendicular to the pipe surface, therefore 3D elements need to be used to compute contact stresses. In addition contact elements need to be used to determine the diameter of the contact area.

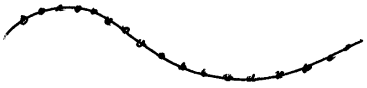

1D elements



2D elements

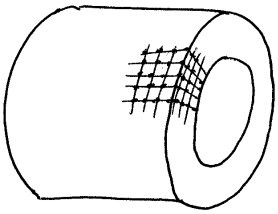

3D elements

Solution of Problem 4

a Stresses

The radius of the hypar is

$$a = \frac{b^2}{h} = \frac{4.5^2}{2} = 10.13 \text{ m.}$$

The direction of the dead load is approximately perpendicular to the shell surface. Therefore the distributed membrane force is

$$n_{xy} = \tfrac{1}{2} a p_z = \tfrac{1}{2} 10.13 \times 3.3 = 16.71 \text{ kN/m.}$$

The length of the interior beams is $l = \sqrt{4.5^2 + 2^2} = 4.92$ m.

The largest moment in the shell occurs at the interior beam because there rotation will not occur due to symmetry. The moment is

$$m_{xx} = 0.511 \frac{p}{l^2} \sqrt[3]{(a\,t\,l)^4} = 0.511 \frac{3.3}{4.92^2} \sqrt[3]{(10.13 \times 0.07 \times 4.92)^4} = 0.369 \text{ kNm/m.}$$

b Force flow

The normal force in the middle of the horizontal edge beams is

$$N_1 = 4.5 \times 16.71 = 75.20 \text{ kN compression.}$$

The normal force in the top of the horizontal interior beams is

$$N_2 = 2 \times 4.5 \times 16.71 = 150.39 \text{ kN tension.}$$

The normal force in the bottom of the inclined edge beams is

$N_3 = 4.92 \times 16.71 = 82.21$ kN compression.

The normal force in the bottom of the inclined interior beams is

$N_4 = 2 \times 4.92 \times 16.71 = 164.43$ kN tension.

Note that the normal force in the top of the inclined interior beams must be equal to zero because (reductio ad absurdum) if there where a normal force its vertical component could not be carried due to the absence of significant stiffness in the vertical direction.

The force in the tie is $T = \frac{4.5}{4.92} N_4 = 150.39$ kN tension.

The force in the columns is $R = \frac{2}{4.92} N_4 + 2\frac{2}{4.92} N_3 = 133.67$ kN.

As a check we calculate the total load $G = 9 \times 9 \times 3.3 = 267.3$ kN which is equal to the sum of the column forces $133.67 + 133.67 = 267.3$ kN.

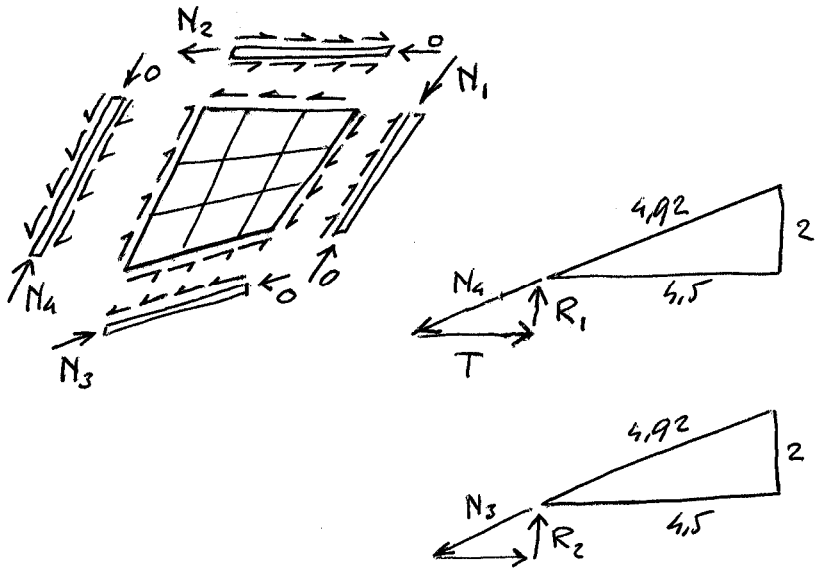

c <u>Alternative design</u>

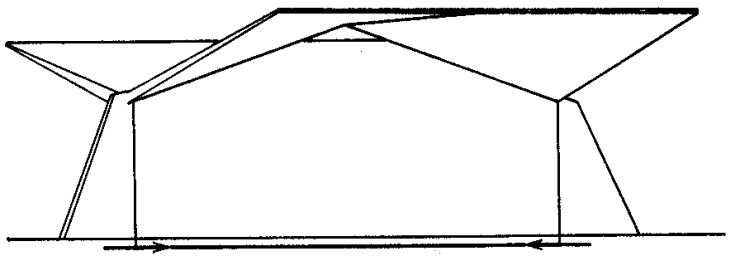

or

