Delft University of Technology
Faculty of Civil Engineering and Geosciences
Structural Mechanics Section

Write your name and study number at the top right-hand of your work.

Exam CT4143 Shell Analysis
Wednesday 25 August 2010, 14:00 – 17:00 hours

Problem 1 (35 minutes)

Explain shortly the meaning of the following eight words in relation to structural shells.

Middle surface
Knockdown factor
Curvature tensor
Pseudosphere
Von Kármán
Hypar
Theorema egregium
Compatibility moment

Problem 2 (35 minutes)

Figure 1 shows a shell part with forces and moments in the positive directions. Add to this figure the symbols for the arrows. (for example x, n_{xx} , ... Make clear which variable belongs to which arrow.)

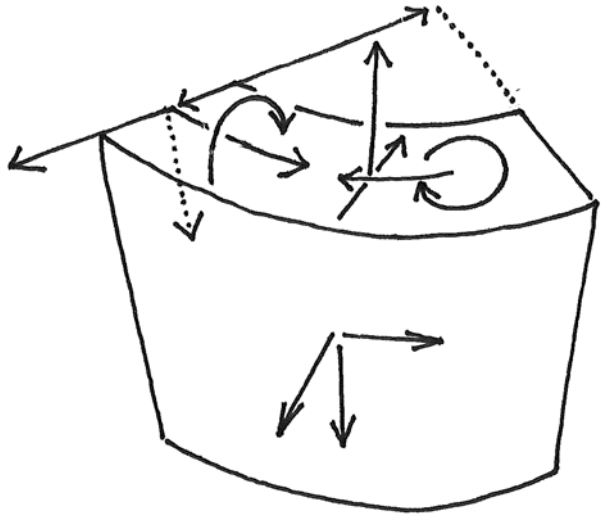

Figure 1. Representative shell part

Problem 3 (35 minutes)

a We can deform a sheet of paper into a cylinder or into a Yoshimura shape applying small forces. Both are in-extensional deformations. However, a significant axial buckling load is needed to transform a steel cylinder into a Yoshimura shape. Explain why it is easy to obtain a Yoshimura shape from a sheet of paper and difficult to obtain it from a steel cylinder.

b The critical load factor for buckling of frame structures needs to be larger than 2 or 3. The critical load factor for buckling of most shell structures needs to be larger than 6. Explain the need for this large difference.

c Buckling is asymmetrical if the strength increases when the buckling shape moves to the left and decreases if the buckling shape moves to the right, or the other way around. Koiter's half-power law says that structures that have asymmetrical buckling properties are very sensitive to imperfections. Draw the buckling shapes of the following structures. To which of these structures Koiter's half-power law can be applied?

1 Column, clamped at the base, loaded by an axial force
2 Arch, clamped at the base, distributed loading
3 Hypar shell with edge beams, transversely loaded
4 Cylinder shell, axially loaded

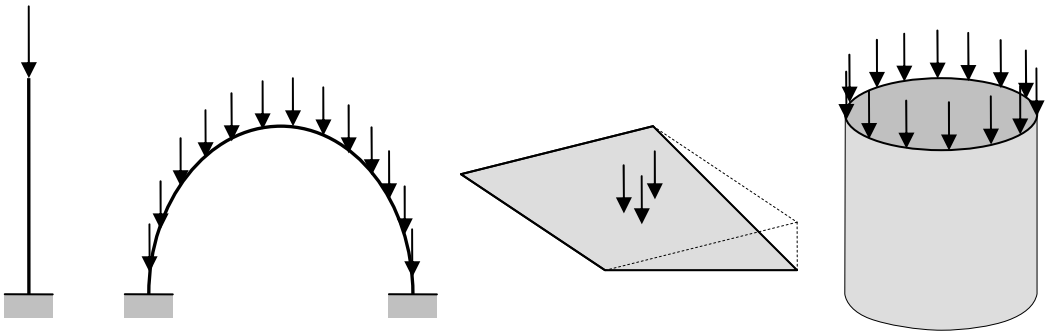

Figure 2. The structures of problem 3c

d The critical buckling load of shell structures can be calculated by

$$n_{cr} = 0.6\,\frac{E\,t^2}{a},$$

where n is the membrane force [kN/m], E is Young's modulus [N/mm²], t is the shell thickness [mm] and a is the radius of curvature [mm]. The length, width and boundary conditions seem not important. Explain this.

e In the latter equation the thickness is raised to the 2nd power. In the buckling equation for columns (Euler) the thickness (depth) is raised to the 3rd power. This suggests that for shell buckling the bending stiffness is not important. Explain this.

Problem 4 (35 minutes)

We consider an assembly of four identical hypar shells (Fig. 4). The shell is supported at three points. The shell thickness is t = 70 mm. The dead weight of the shell including roofing and live load is 5 kN/m².

a Does this design need cables, tension rods or more supports? If so, add these to the design.

b Calculate the membrane force and the largest bending moment in the shell.

c Calculate the forces in the edge beams and interior beams. Also calculate the support reactions.

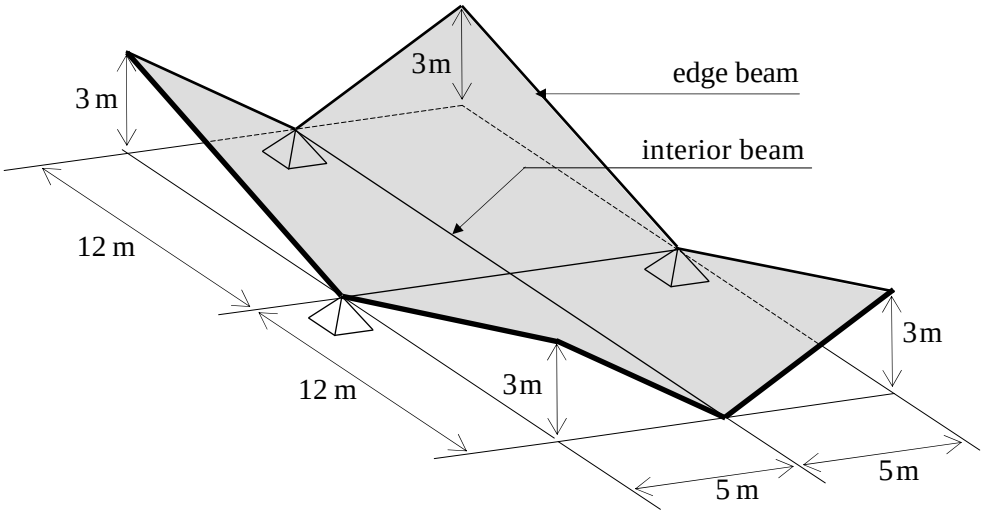

Figure 3. A four hypar shell

d Check whether the shell will buckle. Use Young's modulus is 15 x 10^6 kN/m²

Problem 5 (35 minutes)

A roof structure consists of two connected conoid shells made of 50 mm thick reinforced concrete (Fig. 4). The span is 20 m in both directions and the sagitta is 3 m. The structure is simply supported at the straight edges. It has been analysed for self weight. The principal directions of the membrane forces and moments are shown in Fig. 5 and Fig. 6. Draw the trajectories on these figures. Explain the force flow.

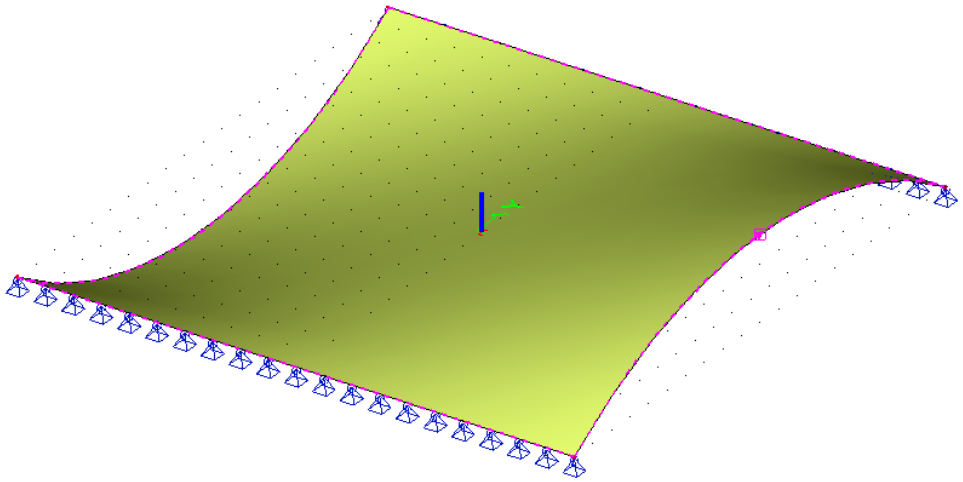

Figure 4. Double conoid structure

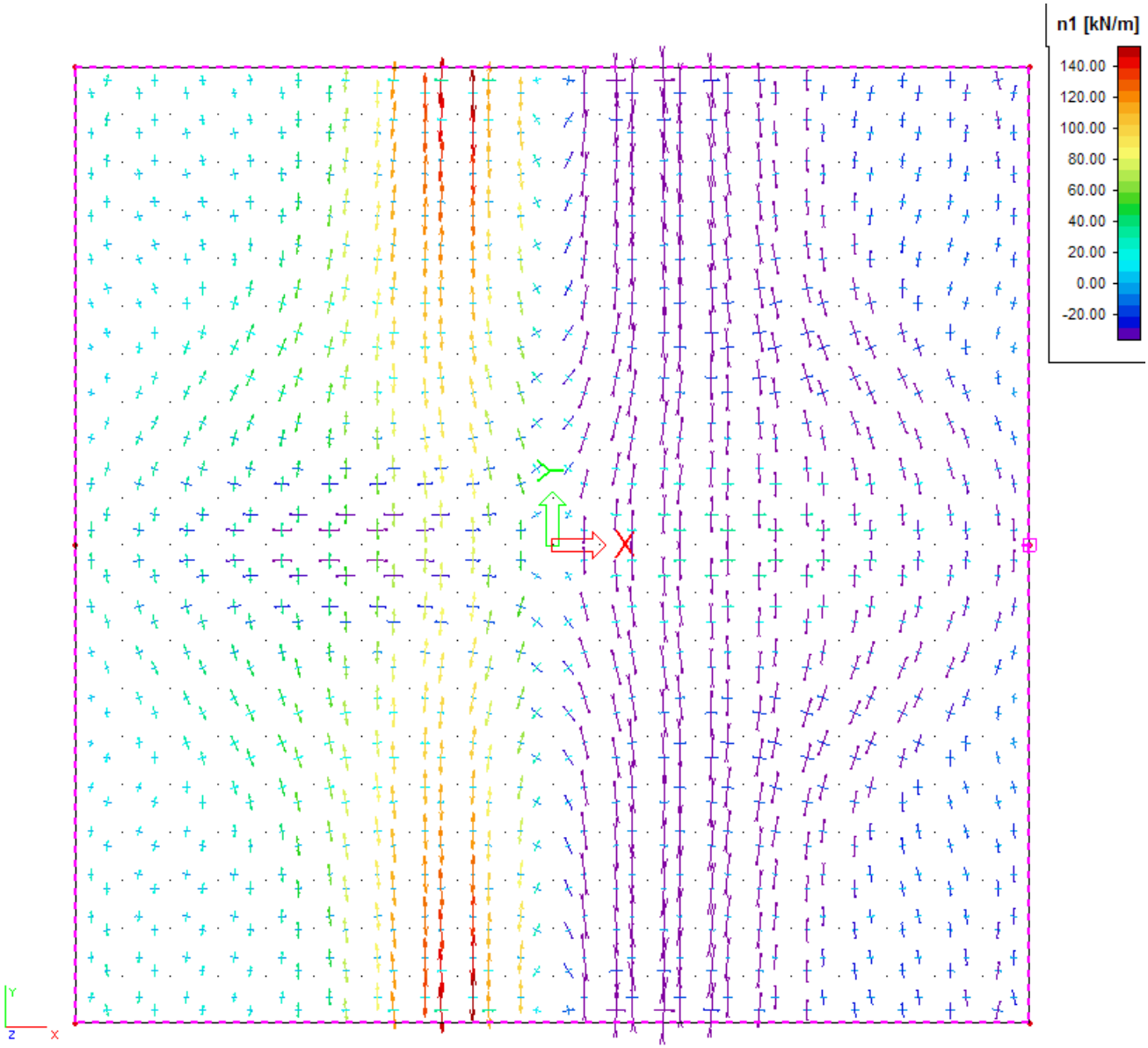

Figure 5. Principal directions of the normal forces

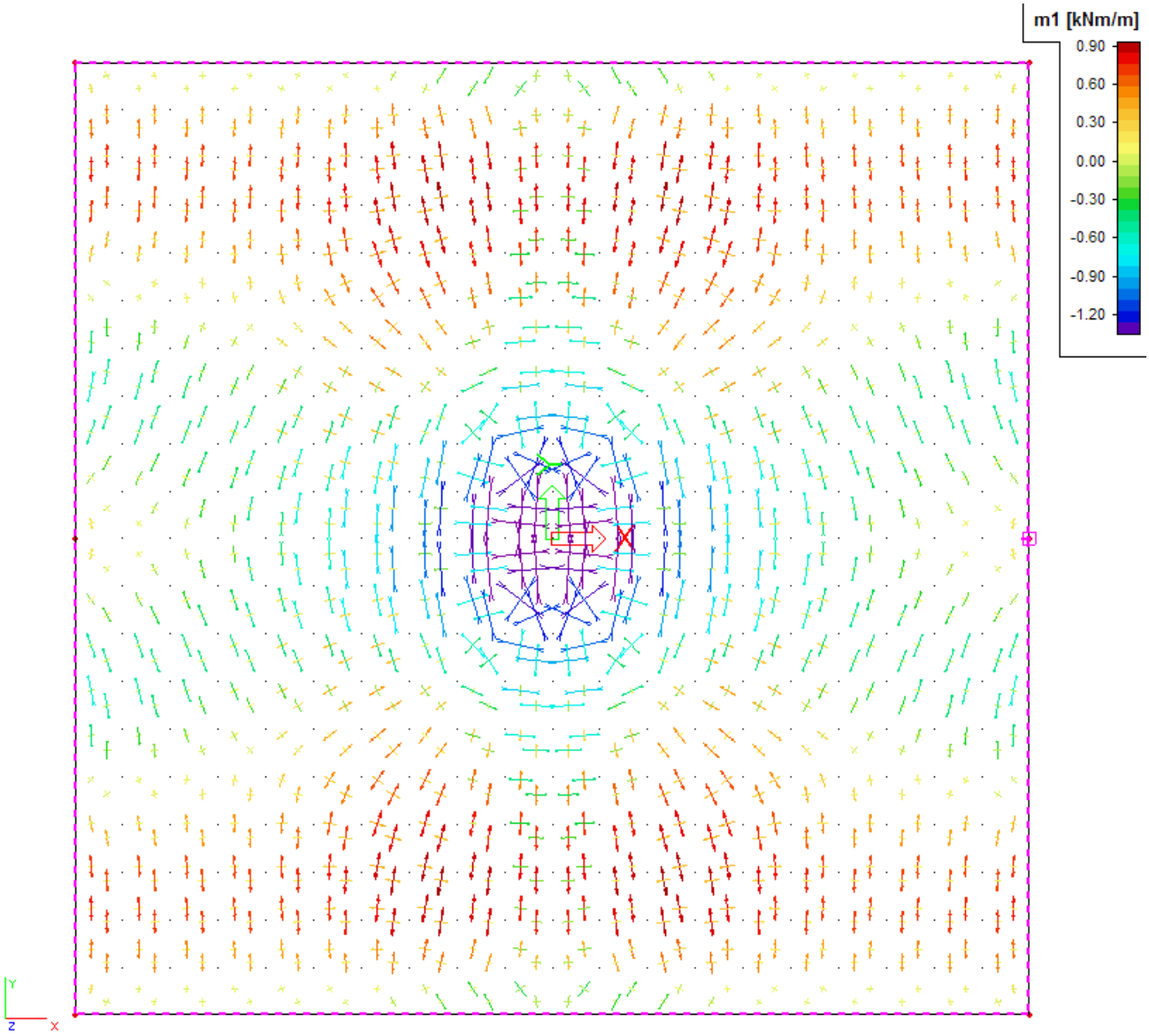

Figure 6. Principal directions of the moment