Delft University of Technology
Faculty of Civil Engineering and Geosciences
Structural Mechanics Section

Write your name and study number at the top right-hand of your work.

Exam CT4143 Shell Analysis
Wednesday 24 August 2011, 14:00 – 17:00 hours

Problem 1 (30 minutes) 1.6 point

Explain shortly the meaning of the following eight words in relation to structural shells.

Elpar
Fully stressed dome
Star
Edge disturbance
Gaussian curvature
NURBS
Principal direction
Catenary

Problem 2 (30 minutes) 1.5 point

a Figure 1 shows a shell part with forces and moments in the positive directions. Add to this figure the variables for the directions, forces and moments (for example x, n_{xx} , ... Make clear which variable belongs to which arrow.) (You can hand in this page with your answers.)

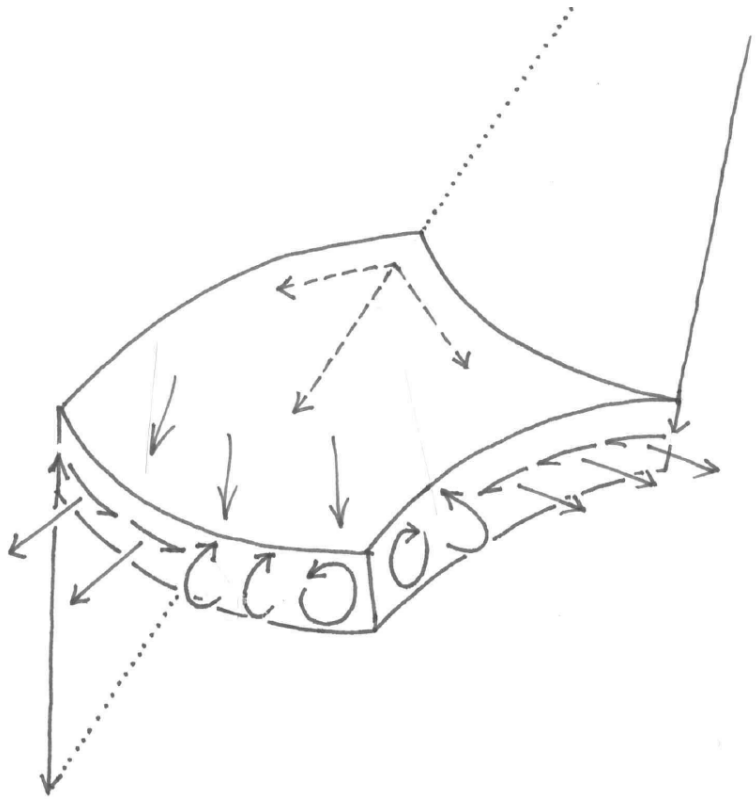

Figure 1. Representative shell part

b Which formula is used for calculating the shear stress σ_{yz} in the location (x,y,z) = (0,0,0)?

c Bernoulli's hypotheses is: "*Plane cross-sections remain plane during bending*." Is this hypothesis true for the stresses in a thin shell? Explain your answer.

d What is the middle surface of a shell?

e Which trajectories can be plotted on a shell surface?

Problem 3 (30 minutes) 1.5 point

a Hypars can be more slender than other shells. Why is this?

A Hypars do not have in-extensional deformation
B The edge disturbances of hypars are smaller than other shells
C Hypars are not sensitive to imperfections
D Most of the load is carried by the edge beams

b Which has zero Gaussian curvature?

A Sphere
B Cone
C Elliptic paraboloid
D Pseudo sphere

c Suppose that a scientist would find a simple model for imperfection sensitivity. What would be a consequence?

A We need no longer for finite element specialists to analyse our shell designs.
B This would lead to more questions that need to be investigated too.
C There is hardly any consequence because imperfections are not important for most shells.
D We could build thinner and much larger shells that are not sensitive to imperfections.

d Can a thin shell be modelled as many small flat plates connected to each other?

A No because each connection would give an edge disturbance that does not exist in reality.
B No because that would not fit.
C Yes, That is what we do when using flat finite elements
D Yes but only in theory because we would need an infinite number of flat plates

e Who developed a model for thick plates which was later used for thick shells too?

A Dr. H.S. Tsien
B Dr. A.E.H. Love
C Dr. R.D. Mindlin
D Dr. Phil

Problem 4 (30 minutes) 1.8 point

a Building our timber grid shell in the Mekel park showed a problem related to twisting of the laths. What was this problem? Which solutions are possible?

b Suppose that we would have completed our Mekel park grid shell, covered it with fabric and put it on columns. People would use it for barbeques and parties. Would it have been a safe structure? Explain your answer.

c Next year we will build a grid shell with an elliptic ground plan. What are the consequences for the edge beam?

Problem 5 (30 minutes) 1.5 point

Consider an assembly of four identical reinforced concrete hypars (Fig. 3). The shell thickness is t = 80 mm. The distributed load including self weight is 3 kN/m². (safety factors are included in all numbers.)

a Does this design need cables? If so, add these.

b Calculate the membrane force and the largest bending moment in the shell.

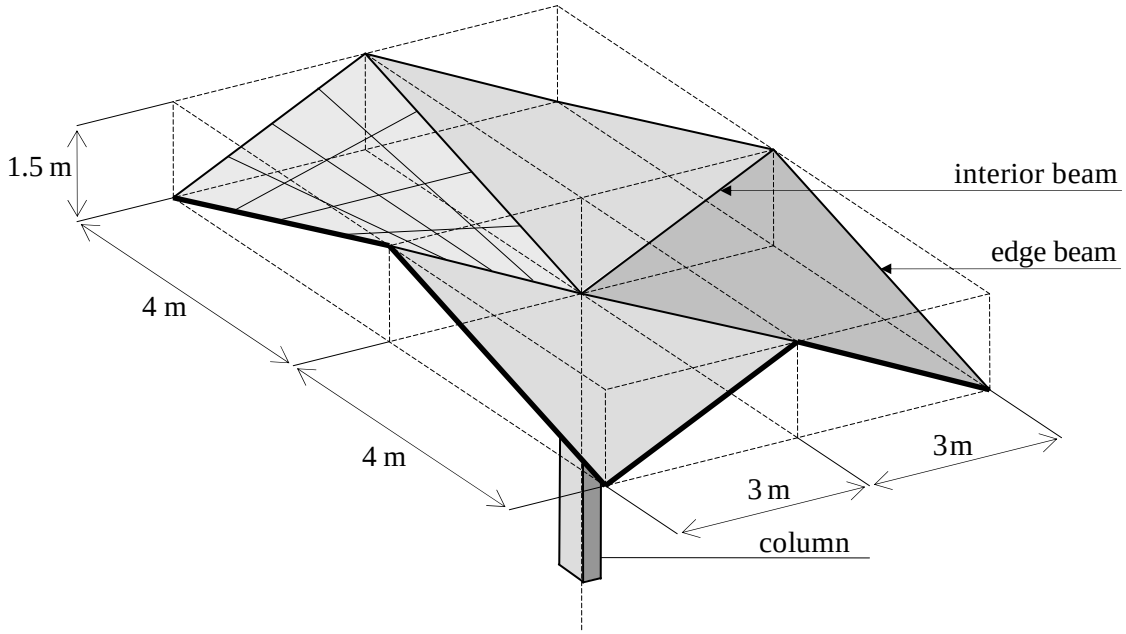

Figure 3. Four hypar roof

c Calculate the forces in the beams.

d Check whether the shell will buckle. Use Young's modulus is 15 x 10^6 kN/m². (This is the tangent stiffness of cracked reinforced concrete at small stresses.)

e Calculate the reinforcement required to carry the membrane forces. Use a yield stress of 400 N/mm². The bar directions are parallel to the shell edges.

Problem 6 (30 minutes) 2.1 point

An aluminium drum is loaded by a vertical edge load (Fig. 4).

a Calculate the stress in the shell close to the edge ring.

b Calculate the axial stress in the edge ring. Is it tension or compression?

c Check buckling of the shell.

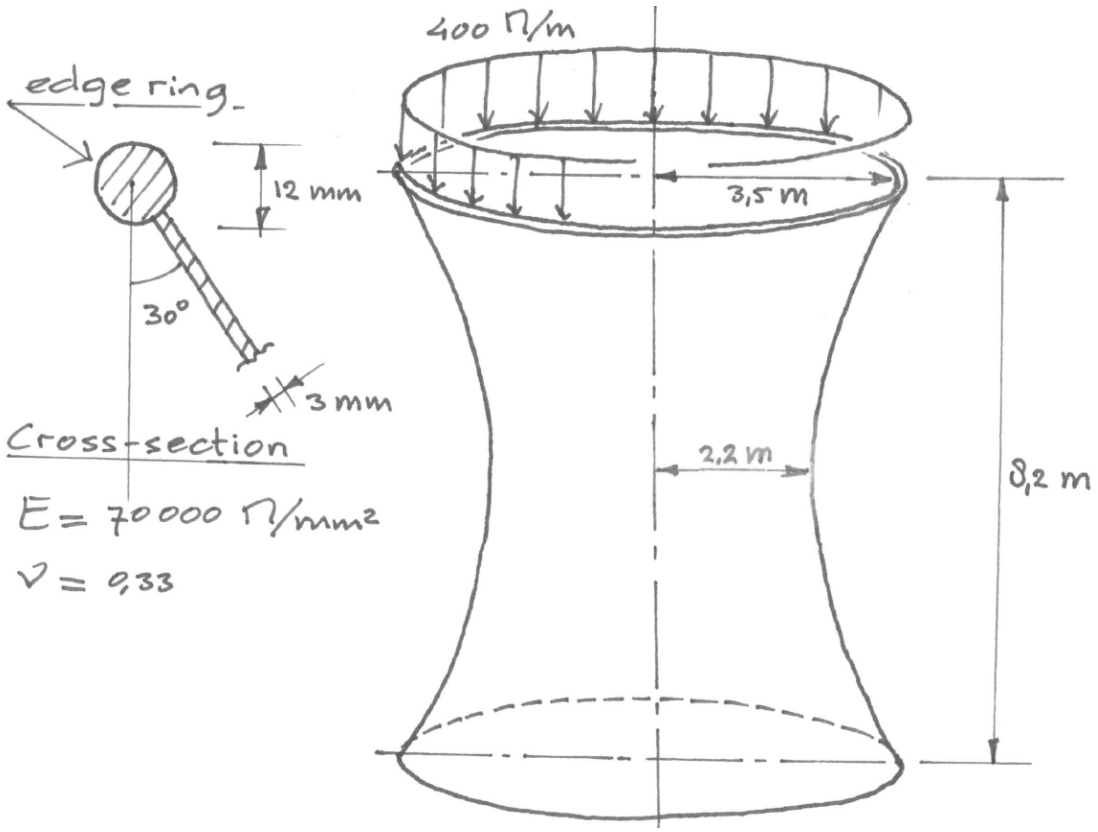

Figure 4. Aluminium drum

Exam CT4143, 24 August 2011
Solution to Problem 1

Elpar ……	Elliptic paraboloid, $\bar{z} = \frac{\bar{x}^2}{b} + \frac{\bar{y}^2}{c}$, where *b* and *c* determine the length and width
Fully stressed dome ……....	Dome in which the stress in the hoop direction and the stress in the meridional direction are the same and equal to the allowable stress
Star ……	Point in a stress field where 3 trajectories cross not within any 90º angle
Edge disturbance ……	Peaks in the stresses near an edge or a discontinuity
Gaussian curvature …….....	Product of the principal curvatures $k_G = k_1 k_2$
NURBS ……	Square surface part in a CAD program that can be distorted in any curved shape
Principal direction ……	Directions for which the off diagonal terms of the tensor are zero
Catenary ……..	Shape of a chain hanging between two points due to self weight

Solution to Problem 2

a Variables

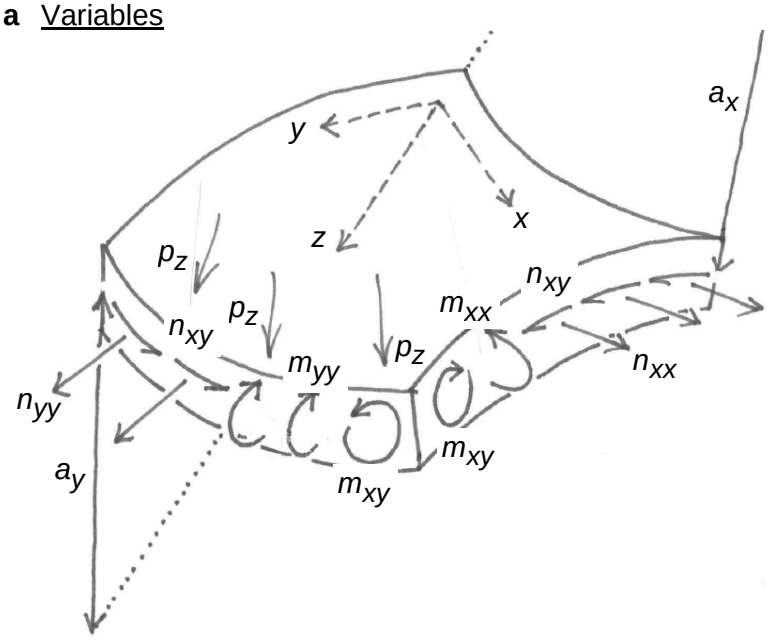

b Shear stress

$$\sigma_{yz} = \frac{3}{2}\frac{q_y}{t}$$

provided that the shell is thin.

c Bernoulli's hypothesis
Yes, for a thin shell it is true. For a thick shell and around point loads it is not true.

d Middle surface
The imaginary surface half way between the inside and outside surface.

e Trajectories
- curvature,
- membrane forces,
- moments,
- out of plane shear forces,
- stresses in the inside surface,
- stresses in the outside surface.

Not very useful but also possible are;
- strains of the middle surface,
- strains of the inside surface,
- strains of the outside surface.

Solution to Problem 3

a C

b B

c A

d C

e C

Solution to Problem 4

a Twisting problem
The laths have a large torsion stiffness. So, twisting is not really possible. This was a problem when making the joints. Full contact was often not possible (Fig. 10). Some laths broke when trying to twist them in the right shape.

Solution 1
Accept that full contact is not possible in many of the joints.

Solution 2
Adopt an alternative grid (Fig. 11).



Figure 10. Typical joint between two laths

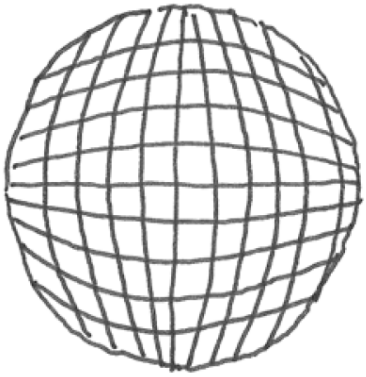

Figure 11. Alternative grid

b Safe
The unfinished shell carried the load of 7 persons. The finished shell would have carried 14 people. 14 x 0.7 kN / (3.14 / 4 x 7²) = 0.25 kN/m². Wind load in a storm can be 0.5 kN/m². The shell might not withstand this storm. It is not safe.

c Edge beam
The laths push against the edge beam of the grid shell, especially during loading. This load is in the radial direction and somewhat uniform. In a circular edge beam this will give normal forces and small moments. In an elliptical edge beam this will give normal forces and large moments. (It wants to become circular.) Therefore, an elliptical edge beam needs to be much stronger than a circular edge beam.

Solution to Problem 5

a Cables
Yes.

b Membrane force and moment

Radius of curvature $a = \dfrac{2 \times 1.5}{0.75} = 4$ m

The direction of the dead load is approximately perpendicular to the shell surface. Therefore, the distributed membrane force is

$n_{xy} = \frac{1}{2} a p_z = \frac{1}{2} 4 \times 3 = 6$ kN/m.

The length of the long beams is $\sqrt{1.5^2 + 4^2} = 4.27$ m.

The length of the short beams is $\sqrt{1.5^2 + 3^2} = 3.35$ m.

The largest moment in the shell occurs at the short interior beams. Rotation will not occur due to symmetry. The moment is

$$m_{xx} = 0.511 \frac{p_z}{l^2} \sqrt[3]{(a t l)^4} = 0.511 \frac{3}{3.35^2} (4 \times 0.080 \times 3.35)^{\frac{4}{3}} = 0.15 \text{ kNm/m.}$$

c Force flow
See figure.

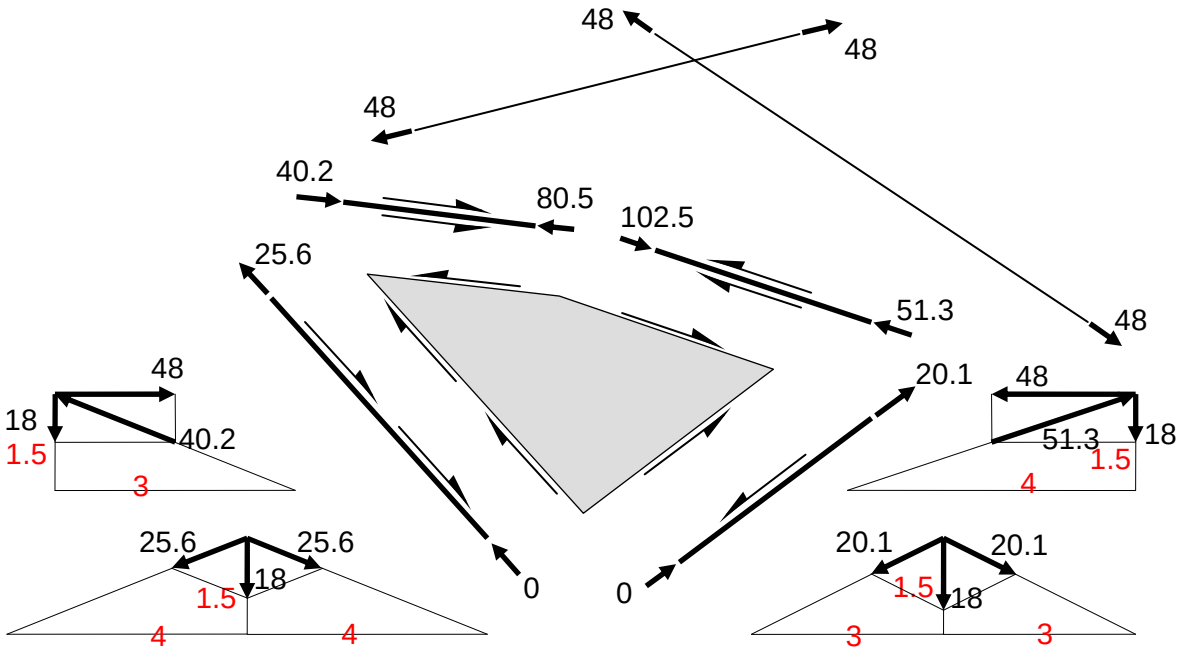

Check: The force that goes into the column is

$$2\times 80.5\frac{1.5}{3.35}+2\times 12\frac{1.5}{4.27}=144\,\text{kN}$$

6 x 8 x 3 = 144 kN OK.

d Buckling

The critical membrane force is

$$n_{xy,cr}=0.6\frac{E\,t^2}{a}=0.6\frac{15\times 10^6\times 0.080^2}{4}=14400\ \text{kN/m}$$

(A knockdown factor is not needed because hypars are not sensitive to imperfections.)
The actual membrane force (6 kN/m) is much smaller, therefore, it will not buckle.

e Reinforcement

Required reinforcement membrane force

$$n_{sx}=n_{xx}+\left|n_{xy}\right|=0+6=6\,\text{kN/m}$$

$$n_{sy}=n_{yy}+\left|n_{xy}\right|=0+6=6\,\text{kN/m}.$$

Minimum reinforcement ratio is 0.10%.
Proposed ∅ 5 – 250 in two directions

$$A_s=\tfrac{1}{4}\pi 5^2\times 1000/250=79\,\text{mm}^2/\text{m}$$

Reinforcement ratio $\frac{A_s}{A}=\frac{79}{1000\times 80}=0.10\,\%\ \geq\ 0.10\%$ OK

$$n_{\max}=79\times 400=31600\ \text{N/m}=31.6\ \text{kN/m}.$$

Available is much more than required therefore the proposed minimum reinforcement is OK.

Solution to Problem 6

a $n_{\text{meridian}} = \dfrac{400}{\cos 30^o} = 462 \text{ N/m}$, $\sigma_{\text{meridian}} = \dfrac{0.462}{3} = 0.154 \text{ N/mm}^2$

b $N_{\text{ring}} = 400 \tan 30^o \times 3.5 = 808 \text{ N}$ (Kettle formula), $\sigma_{\text{ring}} = \dfrac{808}{\frac{1}{4}\pi 12^2} = 7.15 \text{ N/mm}^2$ tension

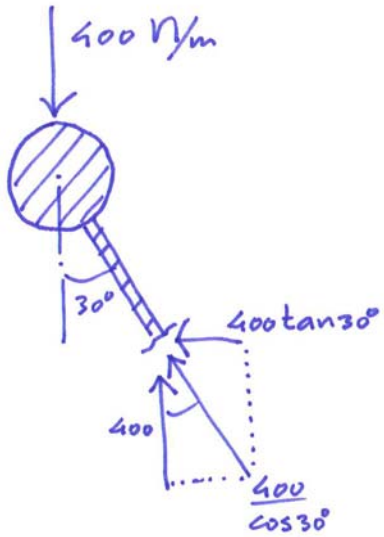

c The critical location is in the middle of the shell

$$n_{\text{meridian}} = \frac{400 \times 2\pi 3.5}{2\pi 2.2} = 636 \text{ N/m}$$

$$n_{\text{cr}} = \frac{0.6}{6}\frac{Et^2}{a} = \frac{0.6}{6}\frac{70000 \times 3^2}{2200} = 28.6 \text{ N/mm} = 28600 \text{ N/m}$$

A knock down factor is applied because the hoop direction is compressed.
(For selecting radius *a*, think of a cylinder fitted to the drum in the direction of the loading.)

Since 636 < 28600 this shell will not buckle.