Delft University of Technology
Faculty of Civil Engineering and Geosciences
Structural Mechanics Section

Write your name and study number at the top right-hand of your work.

Exam CT4143 Shell Analysis
Thursday 30 June 2011, 14:00 – 17:00 hours

Problem 1 (30 minutes) 1.6 point

Explain shortly the meaning of the following eight words in relation to structural shells.

Hypar
Grid shell
Monstar
In-extensional deformation
Mean curvature
Hyperboloid
Trajectory
Edge disturbance

Problem 2 (30 minutes) 1.5 point

a Figure 1 shows a shell part with forces and moments in the positive directions. Add to this figure the variables for the directions, forces and moments (for example x, n_{xx} , ... Make clear which variable belongs to which arrow.) (You can hand in this page with your answers.)

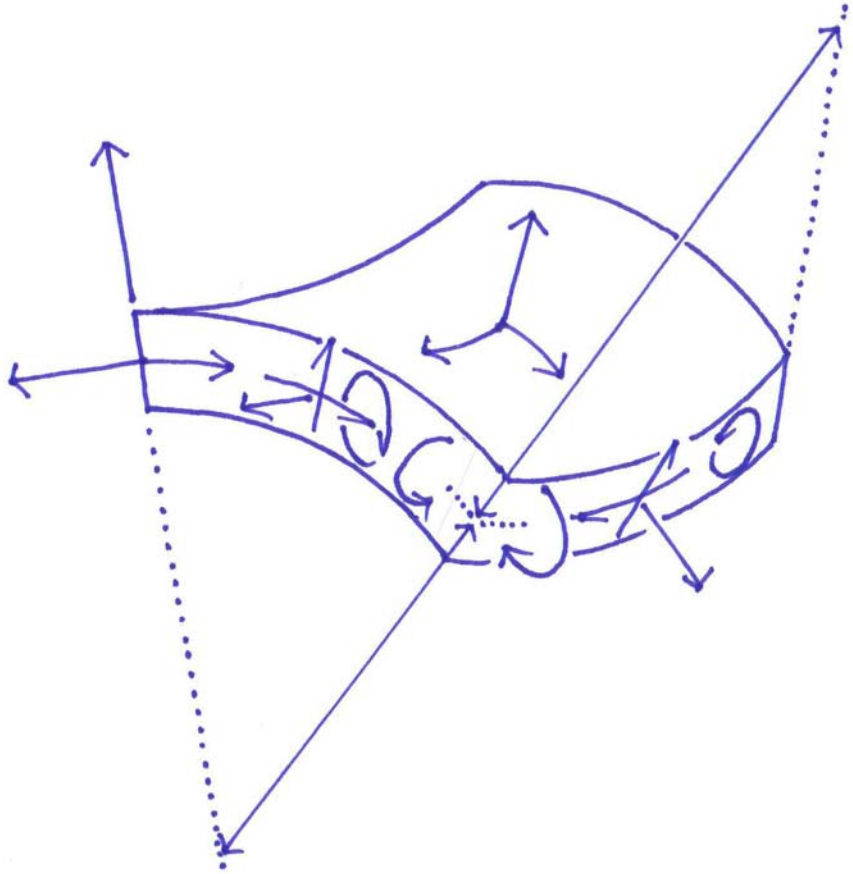

Figure 1. Representative shell part

b Which formula is used to calculate the shear stress σ_{xy} in the location $(x,y,z) = (0,0,t/2)$? (t is the shell thickness.)

c Is the Gaussian curvature positive or negative? Explain your answer.

d Is this shell part thin or thick? Explain your answer.

e What is the consequence of the answer to **d** for finite element analysis?

Problem 3 (30 minutes) 1.5 point

a A finite element model consists of approximately 10^6 elements and 10^6 nodes. It cannot be processed on a normal PC. In the future PC's will have sufficient capacity. In how many years this will be?

A 3 year
B 10 years
C 24 years
D 51 years

b What is an hourglass mode?

A An element mesh deforming in a shape that looks like many hourglasses
B A vibration mode with a natural frequency of one minute
C The buckling shape related to in-extensional deformation
D An element with extra shape functions which has been developed by Prof. C.A. Hourglass

c Shape imperfections often have a very large influence on buckling of thin shells. This influence can be predicted accurately in nonlinear finite element analyses. However, these analyses are not suitable for designing a shell structure. Why is this?

A Because the imperfections are not known before a shell has been build.
B Because the analyses take too much computer time for trying out design changes.
C Because for this an expert in finite element analysis is needed and he/she is expensive.
D Because buckling often does not determine the strength of thin shells.

d Shell elements often have 6 degrees of freedom per node. Why is this?

A Because 2 nodes of a volume element, with each 3 dofs, are replaced by 1 shell element node.
B 2 dofs for normal forces, 1 dof for the shear force, 2 dofs for bending moments and 1 dof for the torsion moment.
C To fulfil the requirements of the virtual work equation.
D To make the element fit in general purpose finite element programs.

e The semi-Loof element has been developed by ….

A … Dr. H.W. Loof.
B … Dr. B.M. Irons.
C … Dr. J.C.J. Gauβ.
D … Dr. H.S. Tsien.

Problem 4 (30 minutes) 1.8 point

a In the Sanders-Koiter equations, 2 variables determine the material of the shell, 4 variables determine the shape of the undeformed shell and 3 variables determine the load. Which are the shape variables?

b The Sanders-Koiter equations are defined in a coordinate system that is plotted on the shell middle surface. Suppose that the *x*-direction and *y*-direction follow the curvature trajectories (Fig. 2). What is the value of k_{xy} in this coordinate system? Explain your answer.

c In Figure 2 we can observe two lemons. Will there be lemons in the stress field of this elpar too? Explain your answer.

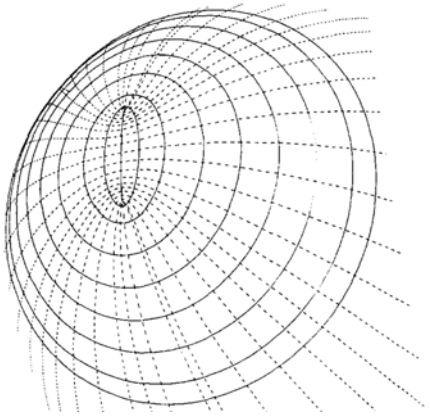

Figure 2. Curvature trajectories on an elpar

Problem 5 (30 minutes) 1.5 point

Consider an assembly of four identical reinforced concrete hypars used as a column foundation (Fig. 3). The shell thickness is t = 70 mm. The column load is 48 kN.

a Does this design need edge beams?

b Calculate the membrane force and the largest bending moment in the shell.

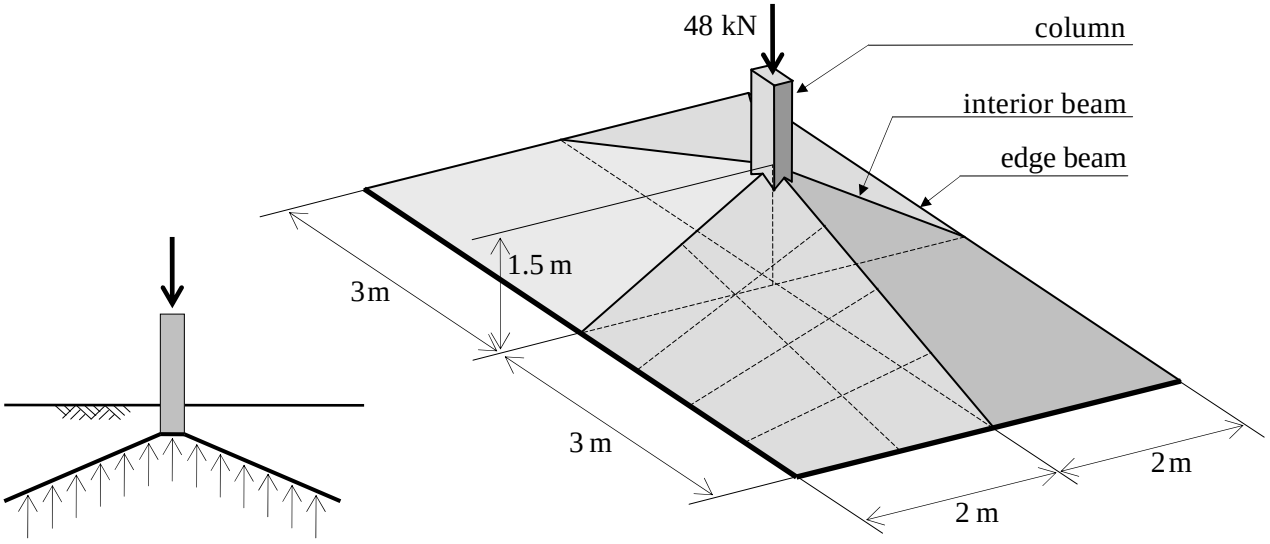

Figure 3. Four hypar column foundation

c Calculate the forces in the beams.

d Check whether the shell will buckle. Assume that no top soil is present. Use Young's modulus is 15 x 10^6 kN/m². (This is the tangent stiffness of cracked reinforced concrete at small stresses.)

e Calculate the reinforcement required to carry the membrane forces. Use a yield stress of 500 N/mm². The bar directions are parallel to the shell edges.

Problem 6 (30 minutes) 2.1 point

A steel drum is loaded by a vertical edge load (Fig. 4).

a Calculate the stress in the shell close to the edge ring.

b Calculate the axial stress in the edge ring.

c Check buckling of the shell close to the edge ring.

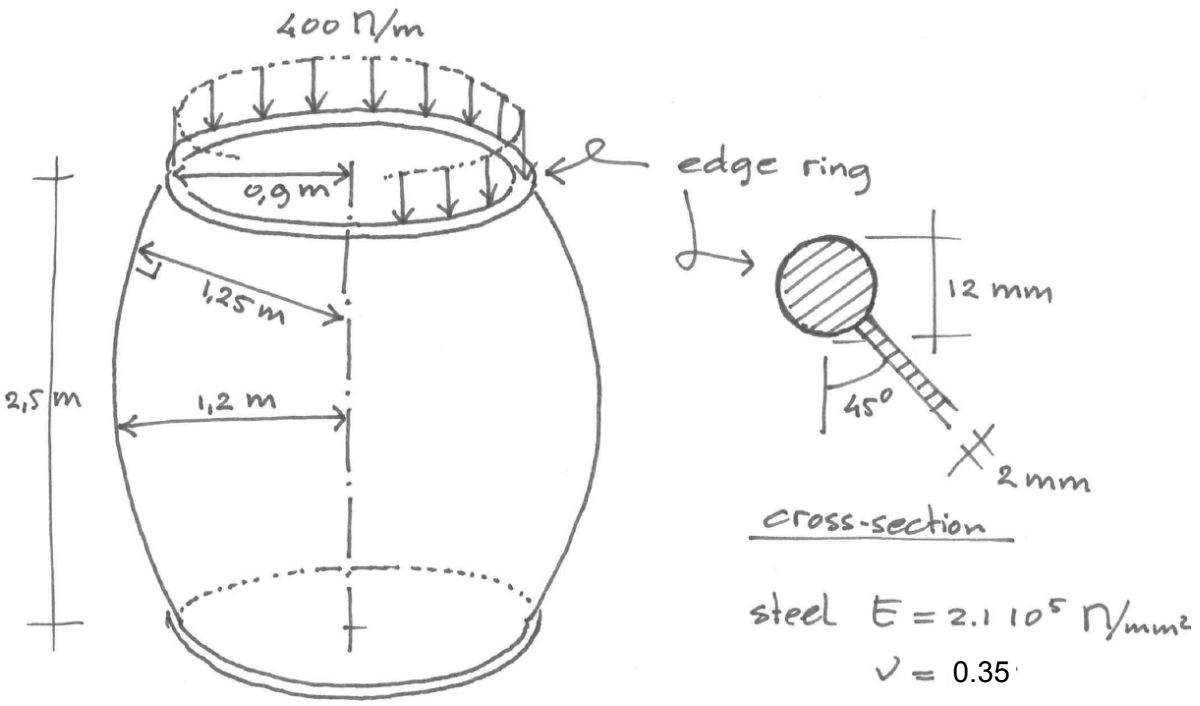

Figure 4. Steel drum

Exam CT4143, 1 July 2010
Solution to Problem 1

Hypar	$\bar{z} = h\frac{\bar{x}}{b}\frac{\bar{y}}{c}$, where h is the sagitta, b is the length and c is the width
Grid shell	Curved surface made of bend laths with a spacing of approximately 300 mm
Monstar	Point in a stress field where 3 trajectories cross within a 90º angle
In-extensional deformation	Deformation with no extension of the middle surface and only bending
Mean curvature	$k_m = \frac{1}{2}(k_1 + k_2)$
Hyperboloid	cooling tower, $\frac{\bar{x}^2}{b^2} + \frac{\bar{y}^2}{c^2} - \frac{\bar{z}^2}{d^2} = 1$, where $2b$ is the length of the smallest cross-section, $2c$ is the width of the smallest cross-section and d determines the shape in the $\bar{z}$ direction
Trajectory	Line that follows the principal directions
Edge disturbance	Peaks in the stresses near an edge or a discontinuity

Solution to Problem 2

a Variables

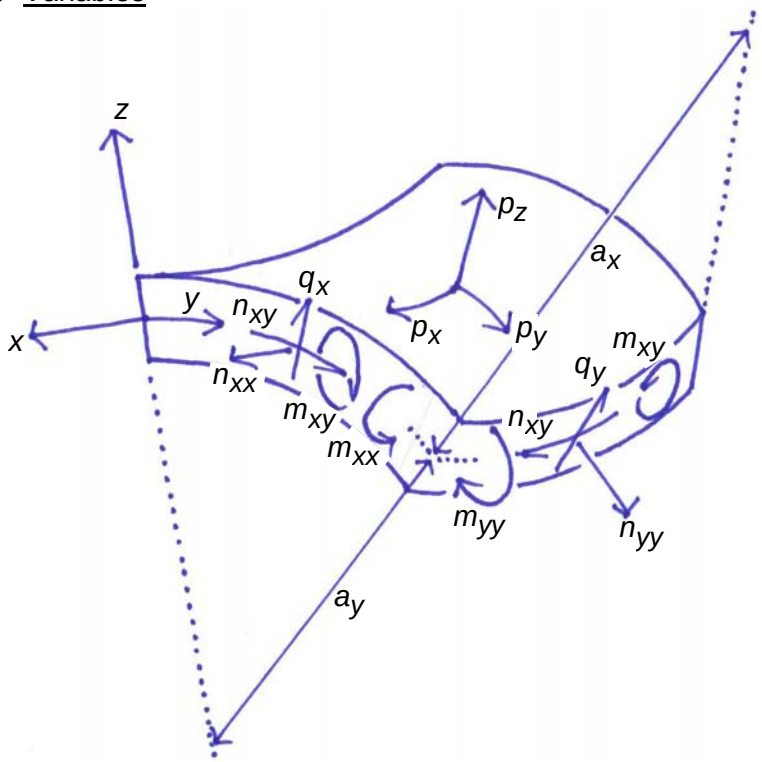

b Shear stress

$$\sigma_{xy} = \frac{n_{xy}}{t} + 6\frac{m_{xy}}{t^2}$$

provided that the shell is thin.

c Gaussian curvature
In the *x* direction the curvature is positive (rotation centre in the positive *z* direction). In the *y* direction the curvature is negative. The shell part seems to be not twisted therefore the x and y curvatures are also the principal curvatures. The Gaussian curvature is defined as the product of the principal curvatures. Positive times negative is negative. Therefore, the Gaussian curvature is negative.

d Thickness
In the *x* direction the radius *a* is 6 times the thickness *t* (measured from the drawing). In the *y* direction the radius is 5 times the thickness. If the *a* / *t* ratio is smaller than approximately 30 a shell is thick. Therefore, this shell part is thick.

e Consequence
Shear deformation can become important compared to bending deformation. Therefore, Reissner-Mindlin elements may be necessary.
The stress distribution may be not linear (bending) or parabolic (shear). Therefore, volume elements may be necessary.

Solution to Problem 3

a C
Hard disk capacity (10^6 nodes x 6 dofs/node)^2 x 8 bytes = 290 000 GB
Moore's law 90 GB x 2 x 2 x 2 x 2 x 2 x 2 x 2 x 2 x 2 x 2 x 2 x 2 = 370 000 GB
2 + 2 + 2 + 2 + 2 + 2 + 2 + 2 + 2 + 2 + 2 + 2 = 24 years

b A

c C

d D

e B

Solution to Problem 4

a Shape
k_x, k_y, k_{xy}, t

b Curved coordinate system
$k_{xy} = 0$ because the trajectories are in the principal directions and principal directions are defined as the directions *s* – *t* in which $k_{st} = 0$.

c Lemons
Usually stress trajectories and curvature trajectories are different. Therefore, lemon numbers and positions are different too.

Solution to Problem 5

a Edge beams
Yes.

b Membrane force and moment

Distributed load $\frac{48}{6\times 4} = 2$ kN/m^2

Radius of curvature $a = \frac{3\times 2}{1.5} = 4$ m

The direction of the dead load is approximately perpendicular to the shell surface. Therefore the distributed membrane force is

$n_{xy} = \frac{1}{2} a\, p_z = \frac{1}{2} 4 \times 2 = 4$ kN/m.

(self weight is neglected.)

The length of the long interior beams is $\sqrt{1.5^2 + 3^2} = 3.35$ m.

The length of the short interior beams is $\sqrt{1.5^2 + 2^2} = 2.50$ m.

The largest moment in the shell occurs at the short interior beams. Rotation will not occur due to symmetry. The moment is

$$m_{xx} = 0.511 \frac{p_z}{l^2} \sqrt[3]{(a\,t\,l)^4} = 0.511 \frac{2}{2.50^2} (4 \times 0.070 \times 2.50)^{\frac{4}{3}} = 0.10 \text{ kNm/m.}$$

c Force flow
The normal force in the short interior beams is $2 \times 4 \times 2.5 = 20$ kN compression.
The normal force in the long interior beams is $2 \times 4 \times 3.35 = 26.8$ kN compression.
The vertical components of these forces are

$N_v = 20 \frac{1.5}{2.5} = 12$ kN.

$N_v = 26.8 \frac{1.5}{3.35} = 12$ kN.

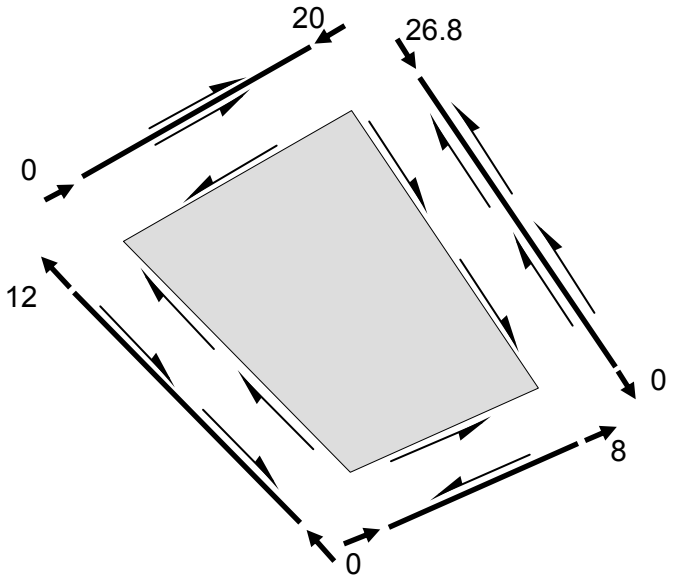

The normal force in the short edge beams is $2 \times 4 = 8$ kN.
The normal force in the long edge beams is $3 \times 4 = 12$ kN tension.

Check: The force that goes into the column is $2 \times 12 + 2 \times 12 = 48$ kN compression. OK

d Buckling
The critical membrane force is

$$n_{xy,cr} = 0.6\frac{E\,t^2}{a} = 0.6\frac{15 \times 10^6 \times 0.070^2}{4} = 11025 \text{ kN/m}$$

(A knockdown factor is not needed because hypars are not sensitive to imperfections.)
The actual membrane force (4 kN/m) is much smaller, therefore, it will not buckle.

e Reinforcement
Required reinforcement membrane force

$n_{sx} = n_{xx} + |n_{xy}| = 0 + 4 = 4$ kN/m

$n_{sy} = n_{yy} + |n_{xy}| = 0 + 4 = 4$ kN/m.

Minimum reinforcement ratio is 0.10%.
Proposed ∅ 5 – 250 in two directions

$A_S = \frac{1}{4}\pi 5^2 \times 1000/250 = 79$ mm²/m

Reinforcement ratio $\frac{A_S}{A} = \frac{79}{1000 \times 70} = 0.11\% > 0.10\%$ OK

$n_{max} = 79 \times 500 = 39500$ N/m = 39.5 kN/m.

Available is much more than required therefore the proposed minimum reinforcement is OK.

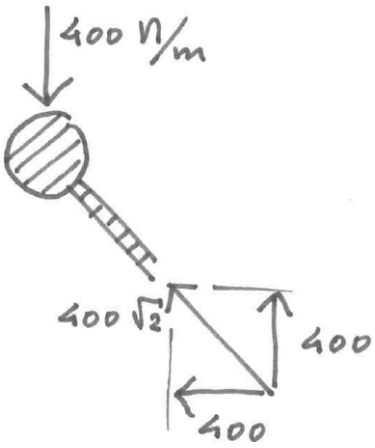

Solution to Problem 6

a $n_{meridian} = 400\sqrt{2} = 566$ N/m, $\sigma_{meridian} = \frac{0.566}{2} = 0.283$ N/mm^2

b $N_{ring} = 400 \times 0.9 = 360$ N (Kettle formula), $\sigma_{ring} = \frac{N_{ring}}{\frac{1}{4}\pi 12^2} = 3.18$ N/mm²

c $n_{cr} = 0.6\frac{Et^2}{a} = 0.6\frac{2.1 \times 10^5\, 2^2}{1250} = 403$ N/mm $= 403000$ N/m
A knock down factor is not needed because the hoop direction is tensioned.
(For selecting radius a, think of a cylinder fitted to the drum in the direction of the loading.)
Since 566 << 403000 this shell will not buckle.

Encore
The edge ring buckles at a radial load of

$$q_{cr} = \frac{3EI}{a^3} = \frac{3 \times 2.1 \times 10^5 \times \frac{\pi}{4} 6^4}{900^3} = 0.88 \text{ N/mm} = 880 \text{ N/m} > 400 \text{ OK}$$