**Delft University of Technology**
Faculty of Civil Engineering and Geosciences
Structural Mechanics Section

Write your name and study number at the top right-hand of your work.

**Exam CT4143 Shell Analysis**
Monday 2 July 2012, 14:00 – 17:00 hours

---

**Problem 1** (36 minutes) 2 points

Explain shortly the meaning of the following eight words in relation to structural shells.

Barlow's formula
Spline
Oculus
Thin shell
Bernoulli's hypothesis
Umbilic
Pantheon
Catenoid

**Problem 2** (36 minutes) 2 points

**a** Figure 1 shows a shell part with forces and moments in the positive directions. Add to this figure the variables for the directions, forces and moments (for example x, $n_{xx}$ , ... Make clear which variable belongs to which arrow.) (You can hand in this page with your answers.)

**b** What is the correct interpretation of a torsion moment on this shell edge? (Fig. 1)

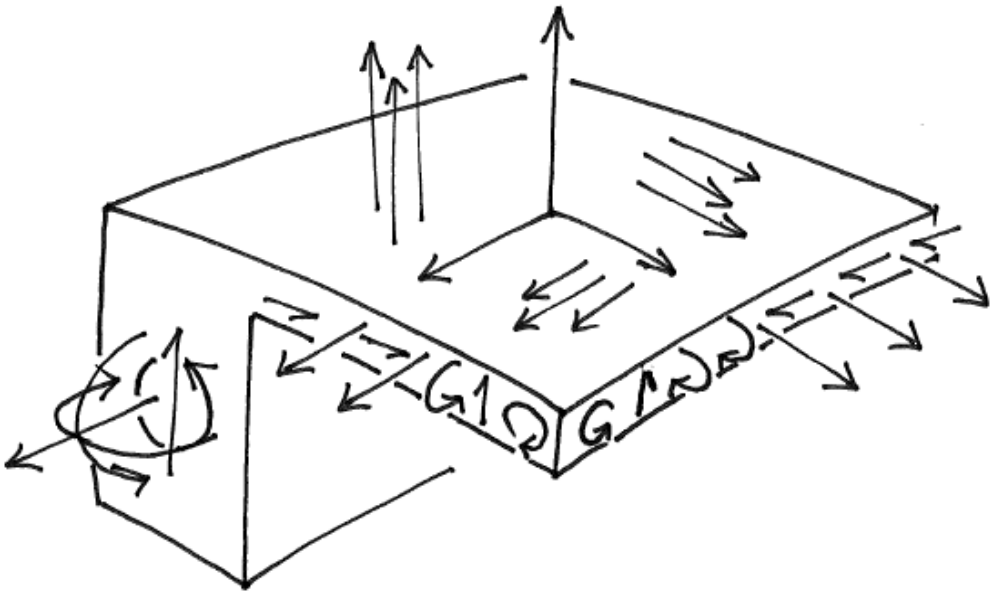

Figure 1. Shell part with edge beam

**c** How many shell elements and beam elements are shown? (Fig. 2)

**d** Why are the offsets used in the finite element model? (Fig. 2)

**e** Beam elements that are longer than shown in Figure 2 can be used, for example with a length equal to 1 or 2 elements. What are the consequences for the finite element results and for the finite element analysis?

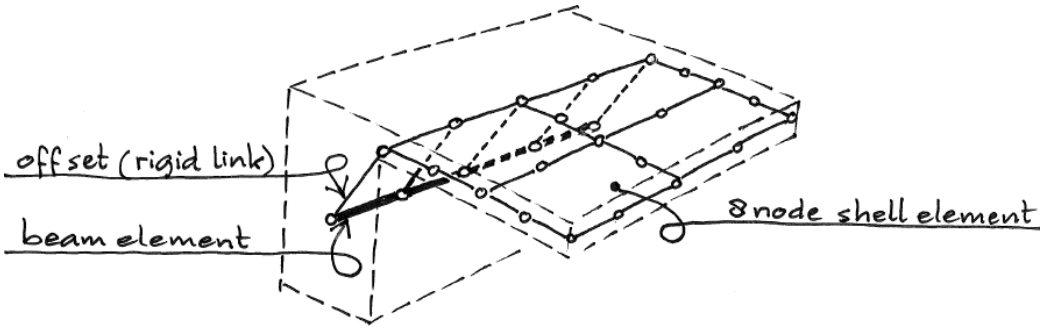


Figure 2. Finite element model of the shell part of Figure 1

**Problem 3** (36 minutes) 2 points

**a** A linear buckling analysis of a shell structure needs to produce buckling load factors larger than 6. Why is this? Choose from A, B, C or D.

A All correctly implemented eigenvalue algorithms produce values larger than 6.
B The load factor times the knock down factor (1/6) must be larger than 1.
C Experience shows that the larger the buckling load factors the better the design.
D Formfinding procedures perform optimally for load factors between 6 and 8.

**b** A modal analysis of a shell structure needs to produce natural frequencies larger than 1 Hz. Why is this?

A Code checks are always formulated such that the result should be larger than 1.
B 1 Hz is the smallest frequency that can be computed with sufficient accuracy.
C Experience shows that the larger the natural frequencies the better the design.
D Wind has frequencies up to 1 Hz. We do not want the shell to vibrate in a storm.

**c** Suppose that scientists would find a formula that accurately describes imperfection sensitivity of shells of any shape. (An extended version of Koiter's law.) What would be a consequence?

A We need no longer for finite element specialists to analyse our shell designs.
B This would lead to more questions that need to be investigated too.
C There is hardly any consequence because imperfections are not important for most shells.
D We could build thinner and much larger shells that are not sensitive to imperfections.

**d** Many books on finite element analysis give warnings for hourglass modes. Why is this?

A Hourglass modes can be very dangerous if not spotted in time.
B Hourglass modes can give the impression that a shell buckles but this is false and can be safely ignored.
C Hourglass modes are a theoretical consequence of reduced integration.
D The frequencies of hourglass modes are very large, therefore, they are easily overlooked.

**e** Who discovered the concentrated shear force in plate and shell edges?

A Dr. Qian Xuesen
B Dr. A.E.H. Love
C Dr. R.D. Mindlin
D Dr. G.R. Kirchhoff

**Problem 4** (36 minutes) 2 points

Consider a thin spherical shell with radius *a* and thickness *t*. Two point loads *P* are imposed to the shell (Fig. 3).

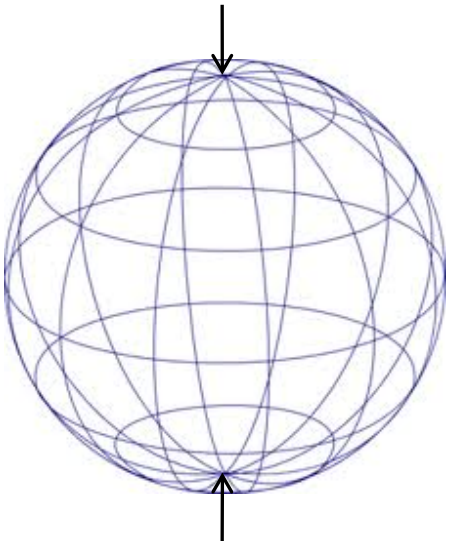

Figure 3. Point loads on a spherical shell

**a** Give the formula's for the deflection of the shell surface and for the membrane forces under a point load.

**b** The membrane forces can cause buckling. Derive a formula for the deflection at which this shell buckles.

**Problem 5** (36 minutes) 2 points

Consider an assembly of four identical reinforced concrete hypars (Fig. 4). The shell thickness is $t$ = 80 mm. The distributed load including self-weight is 4 kN/m². (safety factors are included in all numbers.)

**a** Does this design need cables? If so, add these.

**b** Calculate the membrane force and related stress.

**c** Calculate the largest bending moment and related stress. (Assume that the material is linear-elastic.)

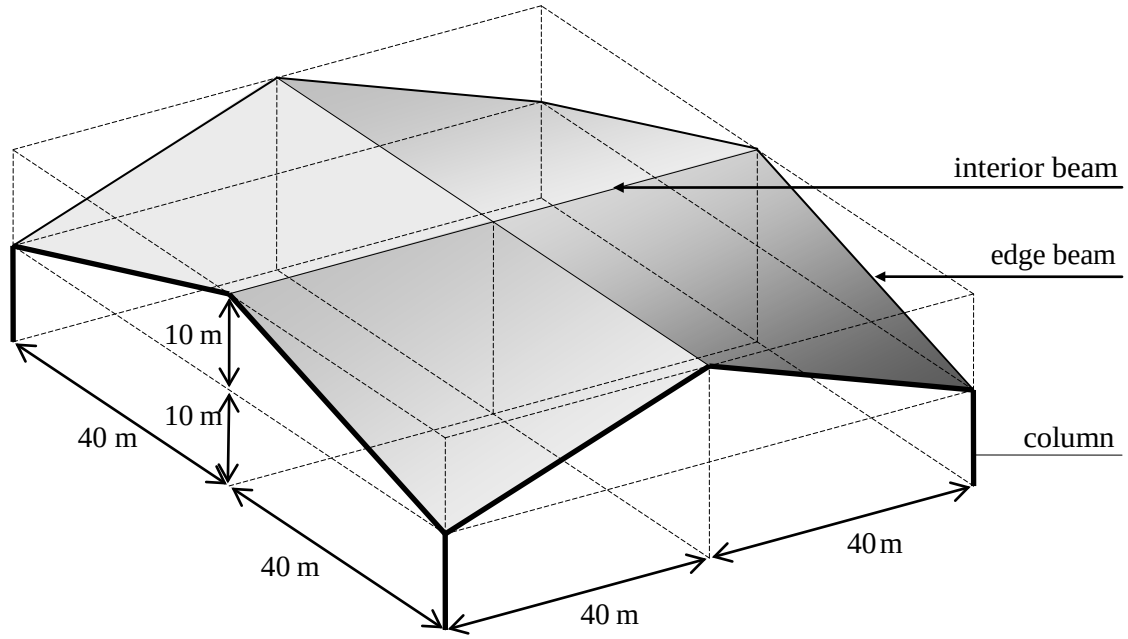


Figure 4. Four hypar roof

**d** Calculate the forces in the beams.

**e** Check whether the shell will buckle. Use Young's modulus is 15 x $10^6$ kN/m². (This is the tangent stiffness of cracked reinforced concrete at small stresses.)

**f** Calculate the reinforcement required to carry the membrane forces. Use a yield stress of 400 N/mm². The bar directions are parallel to the shell edges.

**Exam CT4143, 2 July 2012**
**Solution to Problem 1**

Barlow's formula ..…….. $n = a\,p$
Spline ……..…… A flexible lath to draw curved lines
Oculus ……..…….. An opening in the top of a dome
Thin shell ……..…… Approximately $a / t > 30$
Bernoulli's hypothesis ……..... Plane cross-sections remain plane during bending
Umbilic ……..……..…. A point in a tensor field in which the trajectories are not perpendicular
Pantheon ……..……..A large and very old concrete dome in Rome
Catenoid …….. A shape generated by rotating a catenary around an axis

**Solution to Problem 2**

**a** Variables

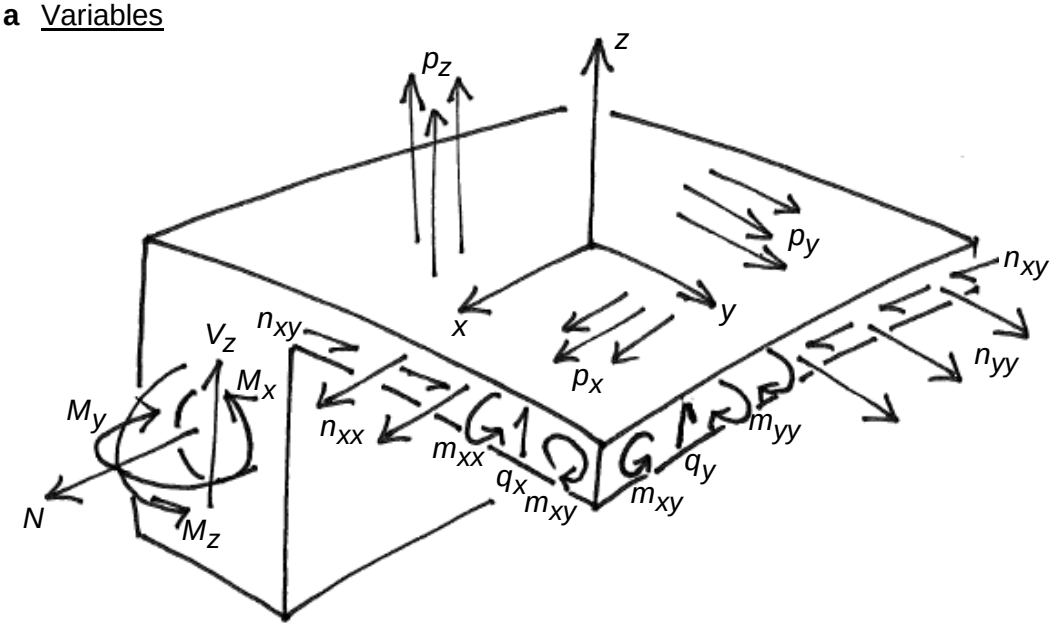


**b** Torsion moment
The torsion moment in the shell edge will go into the edge beam (No concentrated shear force in the shell edge).

**c** Numbers
4 shell elements and 4 beam elements

**d** Offsets
To put the beam elements in the beam centre line.

**e** Longer beam elements
With longer beam elements some shell edge nodes will not be connected to beam elements. Consequently, the shell edge moment will be inaccurate. In addition, longer beam elements do not give less degrees of freedom. (The beam dofs are not really dofs because they are rigidly linked to the shell edge dofs.) Therefore, this does not lead to less memory requirement or a faster computation.

**Solution to Problem 3**

**a** B

**b** D

**c** A

**d** C

**e** D

**Solution to Problem 4**

Reissner's solution

$$\left.\begin{aligned} u_z &= \frac{\sqrt{3}}{4}\frac{Pa}{Et^2}\sqrt{1-\nu^2} \\ n_1 = n_2 &= \frac{\sqrt{3}}{8}\frac{P}{t}\sqrt{1-\nu^2} \end{aligned}\right\} n_1 = n_2 = \frac{Et\,u_z}{2a}$$

Shell buckling formula

$$n_{cr} = 0.6\frac{Et^2}{a}$$

$$\Big\} u_{z,cr} = 1.2t$$

(Reissner's formulas are only valid for small deflections. For increasing deflection the membrane forces change from compression to tension. Therefore, in reality this thin shell does not buckle at 1.2 *t* . However, this formula does show at what deflection the second order effects (already) become important.)

**Solution to Problem 5**

**a** <u>Cables</u>
Yes

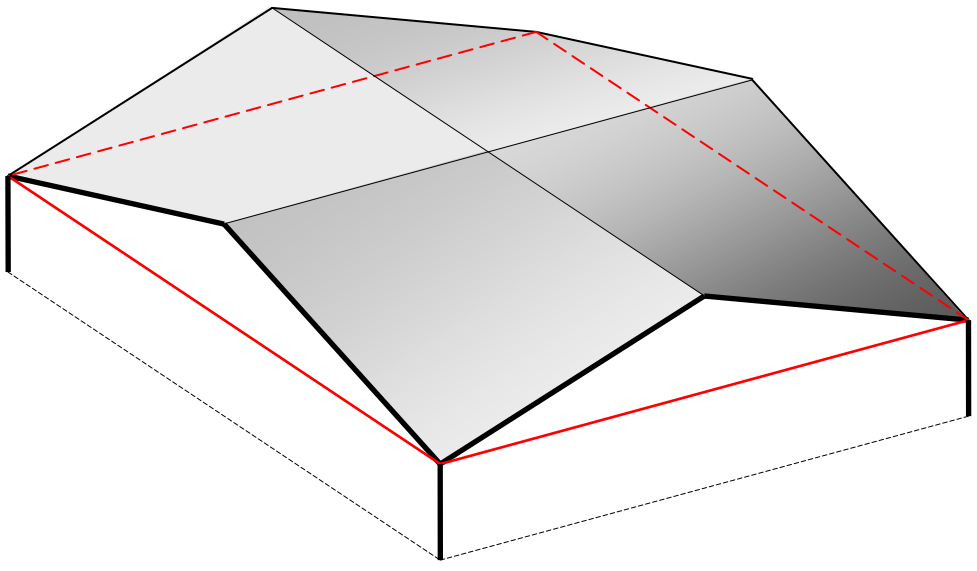

**b** Membrane force

Radius of curvature $a = \dfrac{40 \times 40}{10} = 160$ m

The direction of the dead load is approximately perpendicular to the shell surface. Therefore, the distributed membrane force is

$$n_{xy} = \tfrac{1}{2} a\, p_z = \tfrac{1}{2} 160 \times 4 = 320 \text{ kN/m}.$$

The shear stress is

$$\sigma_{xy} = \frac{n_{xy}}{t} = \frac{320 \text{ N/mm}}{80 \text{ mm}} = 4.0 \text{ N/mm}^2 .$$

**c** Moment

The largest moment in the shell occurs at the interior beams. (Here, a rotation will not occur due to symmetry.) The moment is (Loof's formula)

$$m_{xx} = 0.511 \frac{p_z}{l^2} \sqrt[3]{(a\, t\, l)^4} = 0.511 \frac{4}{40^2} (160 \times 0.080 \times 40)^{\frac{4}{3}} = 5.23 \text{ kNm/m}.$$

The bending stress is

$$\sigma_{xx} = \frac{m_{xx}}{\frac{1}{6} t^2} = \frac{5230 \text{ Nmm/mm}}{\frac{1}{6} (80 \text{ mm})^2} = 4.9 \text{ N/mm}^2 .$$

**d** Force flow

Edge beam length $l_e = \sqrt{40^2 + 10^2} = 41.23$ m

Force in the edge beams $N_e = 320 \times 41.23 = 13200$ kN (at the columns)

Force in the interior beams $N_i = 320 \times 40 \times 2 = 25600$ kN

Cable force $H = 13200 \dfrac{40}{41.23} = 12800$ kN

Vertical component of the beam force $V = 13200 \dfrac{10}{41.23} = 3200$ kN

Column force $2V = 6400$ kN

Check: column force $\dfrac{80 \times 80 \times 4}{4} = 6400$ kN OK.

**e** Buckling

The critical membrane force is

$$n_{xy,cr} = 0.6 \frac{E\, t^2}{a} = 0.6 \frac{15 \times 10^6 \times 0.080^2}{160} = 360 \text{ kN/m}$$

(A knockdown factor is not needed because hypars are not sensitive to imperfections.)
The actual membrane force of 320 kN/m is smaller, therefore, it will not buckle. (But there is very little margin; in relation to the consequences of a sudden collapse.)

**f** Reinforcement

$n_{sx} = n_{xx} + |n_{xy}| = 0 + 320 = 320$ kN/m

$n_{sy} = n_{yy} + |n_{xy}| = 0 + 320 = 320$ kN/m.

Proposed ∅ 12 – 140 in two directions

$A_s = \frac{1}{4}\pi 12^2 \times 1000 / 140 = 808$ mm²/m

$n_{max} = 808 \times 400 = 323000$ N/m = 323 kN/m > 320 kN/m OK