Delft University of Technology
Faculty of Civil Engineering and Geosciences
Structural Mechanics Section

Write your name and study number at the top right-hand of your work.

Exam CIE4143 Shell Analysis
Tuesday 12 August 2014, 14:00 – 17:00 hours

Problem 1 (27 minutes) 1.5 points

Explain shortly the meaning of the following eight words in relation to structural shells.

Timber grid shell
Corbel dome
Hypar
Geodetic sphere
Diaphragm
Consistent boundary conditions
Thin shell
Bernoulli's hypothesis

Problem 2 (27 minutes) 1.5 points

a Figure 1 shows a shell part with interior beam. Add to this figure the variables for the directions, forces and moments (for example x, n_{xx} , ... Make clear which variable belongs to which arrow.) (You can hand in this page with your answers.)

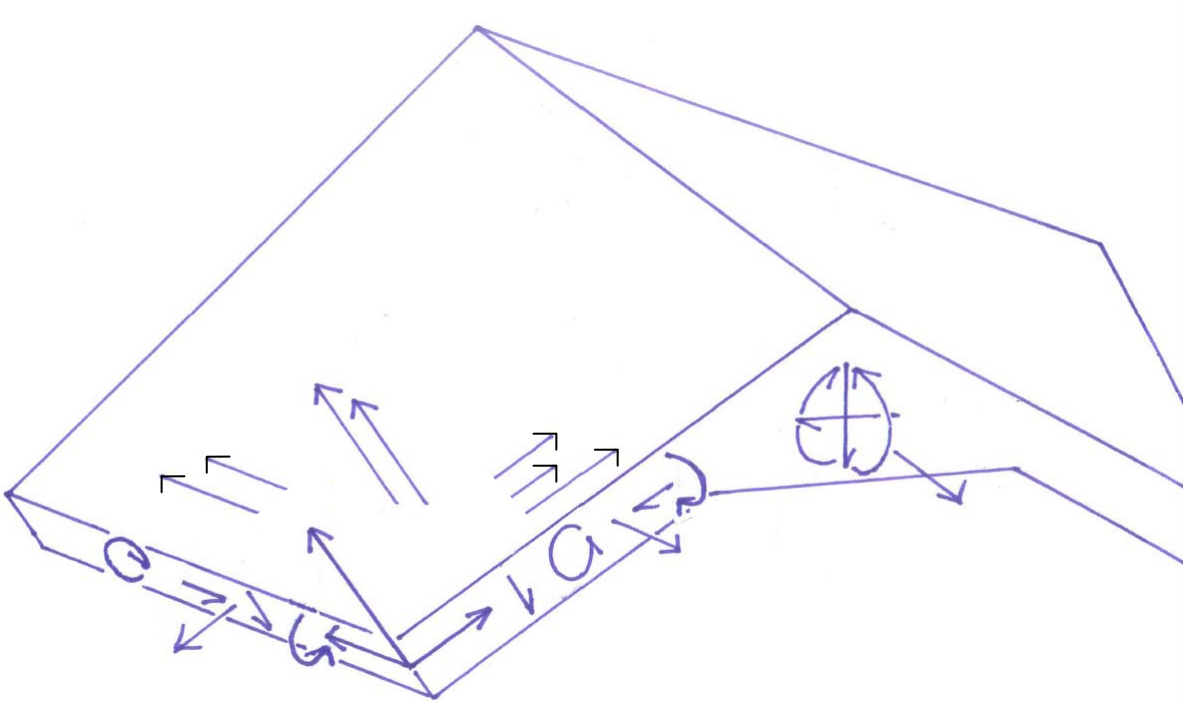

Figure 1. Hypar shell part with interior beam

b Figure 2 shows a finite element model of the shell part. The shell elements close to the interior beam are smaller than the shell elements away from the interior beam. Why is this?

c In Figure 2 eight-node shell elements have been used. Four-node shell elements have not been used. Why not?

d In Figure 2 the shell elements are connected to the beam elements by rigid links. The shell elements are not continued up to the beam element and connected directly. Why not?

e In Figure 2 the beam elements have an offset. The beam elements are not modelled in the beam normal force centre. Why not?

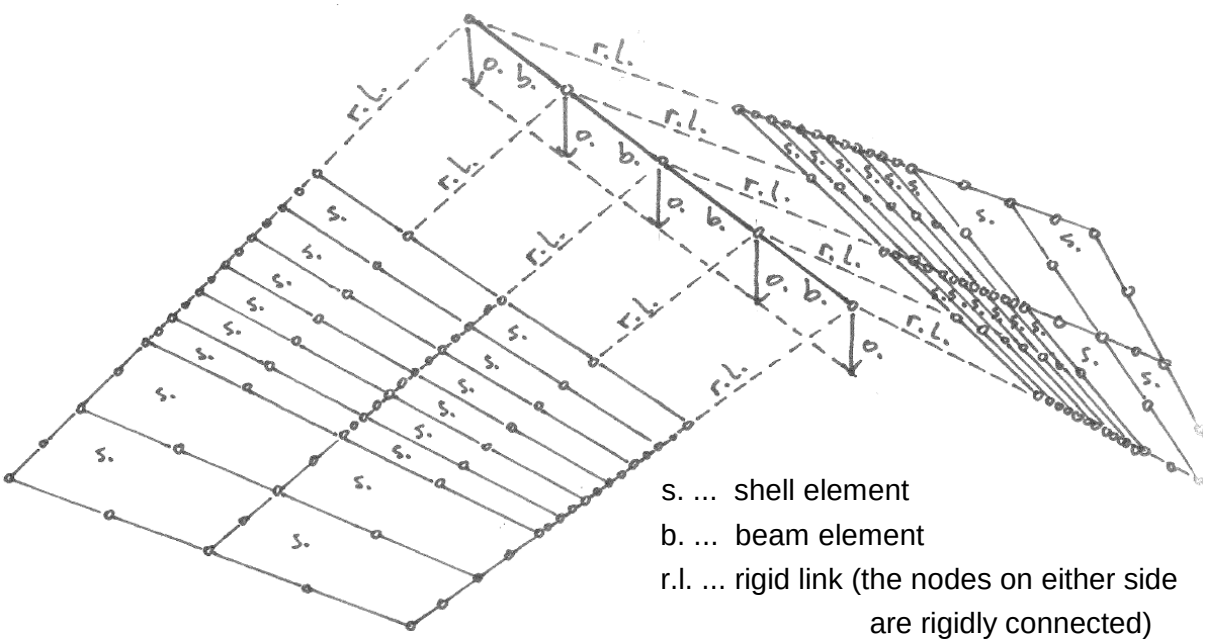

s. ... shell element
b. ... beam element
r.l. ... rigid link (the nodes on either side are rigidly connected)
o. .... offset (the normal force centre is translated compared to the element)

Figure 2. Element distribution of the shell part of Figure 1

Problem 3 (27 minutes) 1.5 points

a The knock down factor is important because of … Choose A, B, C or D.

A the middle third rule.
B edge disturbances.
C in-extensional deformation.
D imperfection sensitivity.

b Fatigue can be caused by … Choose A, B, C or D.

A the middle third rule.
B edge disturbances.
C in-extensional deformation.
D imperfection sensitivity.

c Computing natural frequencies can show … Choose A, B, C or D.

A the middle third rule.
B edge disturbances.
C in-extensional deformation.
D imperfection sensitivity.

d The influence length quantifies … Choose A, B, C or D.

A the middle third rule.
B edge disturbances.
C in-extensional deformation.
D imperfection sensitivity.

e Tension is prevented by … Choose A, B, C or D.

A the middle third rule.
B edge disturbances.
C in-extensional deformation.
D imperfection sensitivity.

Problem 4 (27 minutes) 1.5 points

a Shells of revolution have hoop forces and meridional forces? Apply this concept to a hypar loaded by p_z only. In what directions are the "hoop lines" and the "meridional lines"?

b Suppose we need to increase the stiffness of a shell. Do we need to increase or reduce the Gaussian curvature? Show this with formula's for positive and negative Gaussian curvatures.

c What uncertainties are important in predicting the strength of small shell objects? (such as wine glasses or paper cups)

d What is important in the process of building a geodesic sphere?

Problem 5 (27 minutes) 1.5 points

In shell structures $n_{xy} \neq n_{yx}$. Most of the time we work with $\frac{1}{2}(n_{xy} + n_{yx})$ but it can be interesting to look at $\frac{1}{2}(n_{xy} - n_{yx})$ too.

a Which equation is used to calculate $\frac{1}{2}(n_{xy} - n_{yx})$?

b Suppose $\frac{1}{2}(n_{xy} + n_{yx}) = 40$ kN/m and $\frac{1}{2}(n_{xy} - n_{yx}) = -2$ kN/m. Solve n_{xy} and n_{yx}.

c Is $\begin{bmatrix} n_{xx} & n_{xy} \\ n_{yx} & n_{yy} \end{bmatrix}$ a tensor? Is $\begin{bmatrix} n_{xx} & \frac{1}{2}(n_{xy}+n_{yx}) \\ \frac{1}{2}(n_{xy}+n_{yx}) & n_{yy} \end{bmatrix}$ a tensor?

d Quantity $\frac{1}{2}(n_{xy}-n_{yx})$ does not depend on the direction of the *x* and *y* axis of the local coordinate system. Give an outline of the proof.

e We can calculate the shear stress by $\sigma_{xy}=\frac{n_{xy}}{t}$ or $\sigma_{xy}=\frac{n_{yx}}{t}$ or $\sigma_{xy}=\frac{\frac{1}{2}(n_{xy}+n_{yx})}{2t}$.

Which is correct? Explain your answer.

Problem 6 (27 minutes) 1.5 points (Design by Yipei Zeng, shell exam June 2014)

A structure consists of four masonry hypars (Fig. 3). The shell thickness is *t* = 100 mm. The distributed wind load is 1 kN/m² (horizontal). Self-weight is 2 kN/m² (vertical). (safety factors are included in all numbers.)

a Does this design need cables? If so, add these.

b Calculate the membrane forces and related stress.

c Calculate the largest bending moment and related stress in the hypar that is directly loaded by wind. (Assume that the material is linear-elastic.)

d Calculate the forces in the edge beams and cables if present.

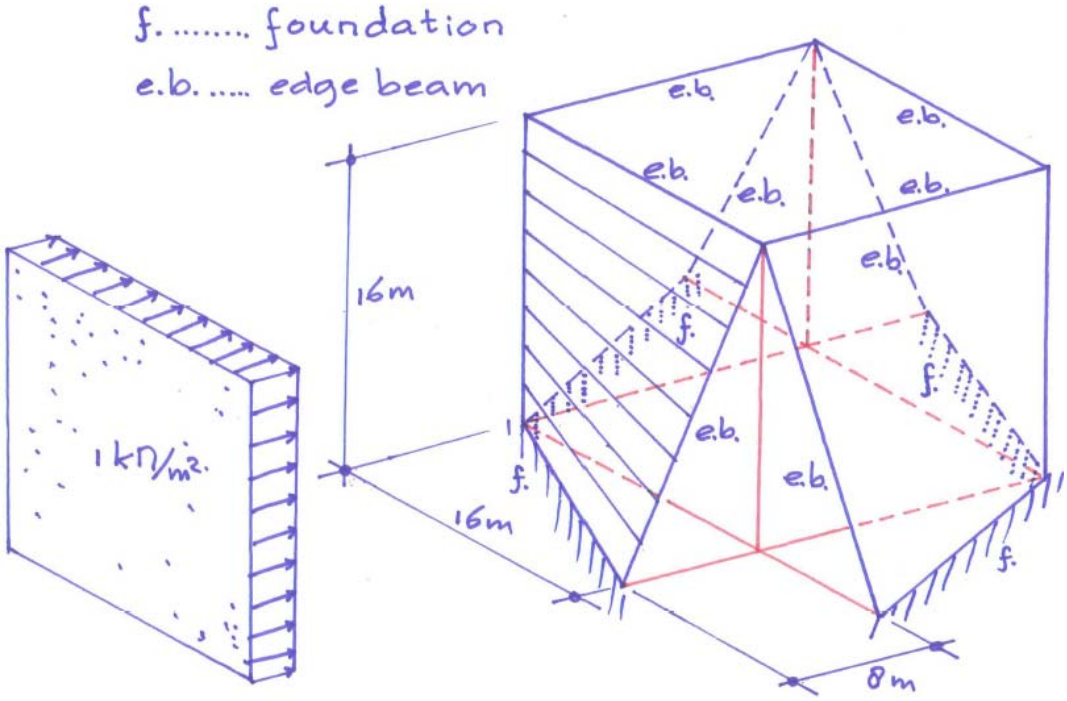

Figure 3. A four hypar building

e Check buckling of the hypar that is directly loaded by wind.
Use Young's modulus is 15 x 10^6 kN/m².

f Is this design feasible? Explain your answer.

Problem 7 (18 minutes) 1 point

Design an assembly of hypar shells to be analysed in the next Shell exam (June 2015).
It needs to be
1) different than in this exam and different than in the previous exams,
2) different than the examples in the handouts,
3) stable,
4) not extremely complicated.
You do not need to analyse this shell.