Delft University of Technology
Faculty of Civil Engineering and Geosciences
Structural Mechanics Section

Write your name and study number at the top right-hand of your work.

Exam CIE4143 Shell Analysis
Tuesday 30 June 2014, 14:00 – 17:00 hours

Problem 1 (27 minutes) 1.5 points

Explain shortly the meaning of the following eight words in relation to structural shells.

Monocoque
Pantheon
Brazier effect
Tensor
Whispering gallery
NURBS
Sanders-Koiter equations
Nervi

Problem 2 (27 minutes) 1.5 points

a Figure 1 shows a shell part with forces and moments in the positive directions. Add to this figure the variables for the directions, forces and moments (for example x, n_{xx} , ... Make clear which variable belongs to which arrow.) (You can hand in this page with your answers.)

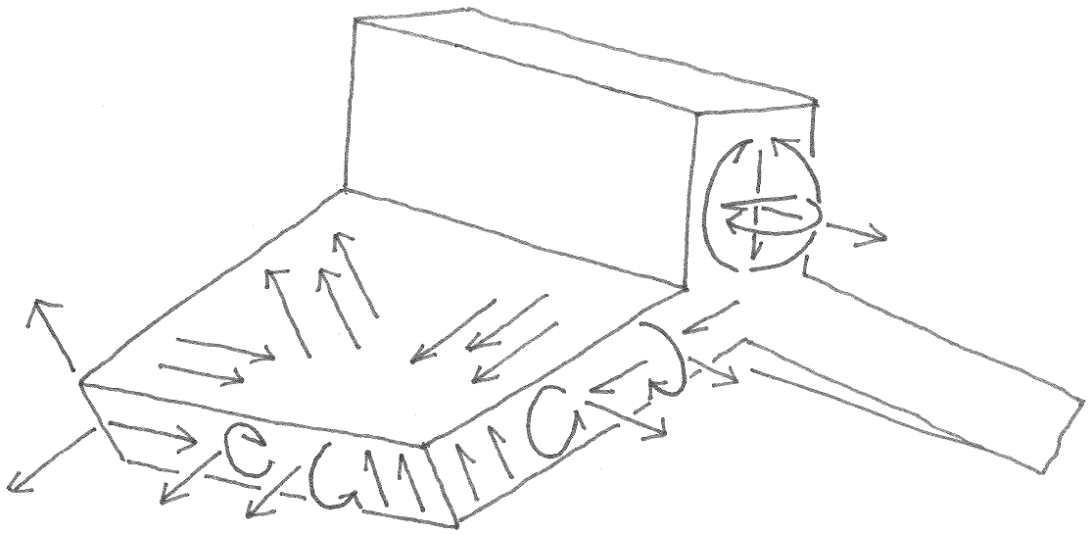

Figure 1. Shell part with interior beam

b There are no concentrated shear forces in the shell near the interior beam. Why is this?

c Figure 2 shows a finite element model of the shell part. It consists out of 8-node shell elements and 2-node beam elements with offset. Can this model be used to accurately compute the stresses in the shell near the interior beam? Explain your answer.

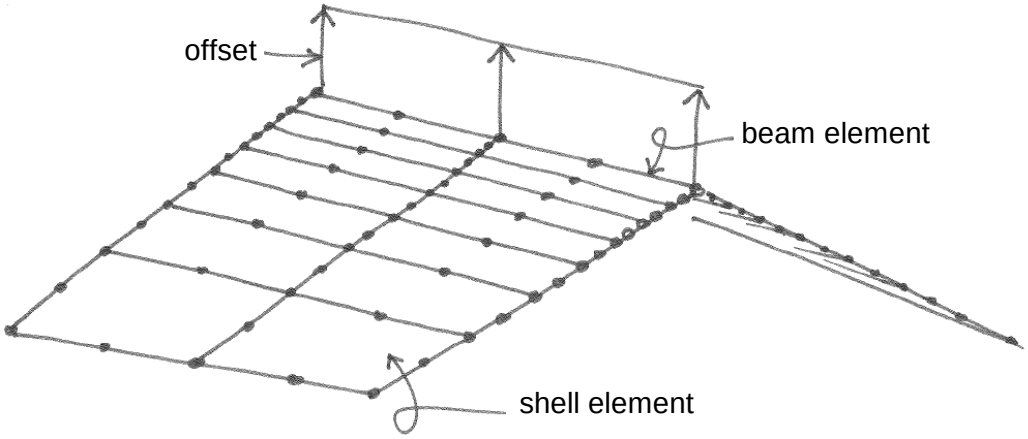

Figure 2. Element distribution of the shell part of Figure 1

Problem 3 (27 minutes) 1.5 points

a Does Gaussian curvature depend on the coordinate system?
Does mean curvature depend on the coordinate system?
Choose A, B, C or D.

A yes, yes
B yes, no
C no, yes
D no, no

b When designing a thin shell it is important to prevent …. Choose A, B, C or D.

A … a natural frequency.
B … an edge disturbance.
C … in-extensional deformation.
D … imperfection sensitivity.

When performing finite element analyses we sometimes observe that a shell design finds a way to escape from carrying the load.

c How is this called in case of a linear finite element analysis? Choose A, B, C or D.

A middle third rule
B edge disturbance
C in-extensional deformation
D imperfection sensitivity

d How is this called in case of a geometrical nonlinear linear finite element analysis?
Choose A, B, C or D.

A middle third rule
B edge disturbance
C in-extensional deformation

D imperfection sensitivity

e Which is your best way of studying shell structures? Choose A, B, C or D.

A Traditional lectures in which the teacher tells everything.
B Classroom assignments in which individual students discover things himself / herself.
C Classroom assignments in which groups of students discover things themselves.
D Studying the reader and not visiting lectures.

Problem 4 (27 minutes) 1.5 points

a What relation exists between membrane forces and changes in Gaussian curvature?

b Suppose we need to increase the stiffness of a shell. Do we need to increase or reduce the Gaussian curvature? Show this with formula's for positive and negative Gaussian curvatures.

c What uncertainties are important in predicting the strength of small shell objects? (such as wine glasses or paper cups)

d What is important in the process of building a geodetic sphere?

Problem 5 (27 minutes) 1.5 points

a A shell shape can be defined by $k_{xx}, k_{yy}, k_{xy}, \alpha_x, \alpha_y$. However, these quantities cannot be chosen independently. What relation exist?

b Derive $k_{xx}, k_{yy}, k_{xy}, \alpha_x, \alpha_y$ of a catenoid from the information in the course handouts.

Problem 6 (27 minutes) 1.5 points

Consider an assembly of four identical reinforced concrete hypars (Fig. 3). The shell thickness is t = 100 mm. The distributed load including self-weight is 4 kN/m². (safety factors are included in all numbers.)

a Does this design need cables? If so, add these.

b Calculate the membrane force and related stress.

c Calculate the largest bending moment and related stress. (Assume that the material is linear-elastic.)

d Calculate the forces in the beams and columns and cables if present.

e Check whether the shell will buckle. Use Young's modulus is 15 x 10^6 kN/m². (This is the tangent stiffness of cracked reinforced concrete at small stresses.)

f Calculate the reinforcement required to carry the membrane forces. Use a yield stress of 450 N/mm². The bar directions are parallel to the shell edges.

Common rebar diameters in the Netherlands are ø8, ø10, ø12, ø16, ø20, ø25, ø32, ø40.

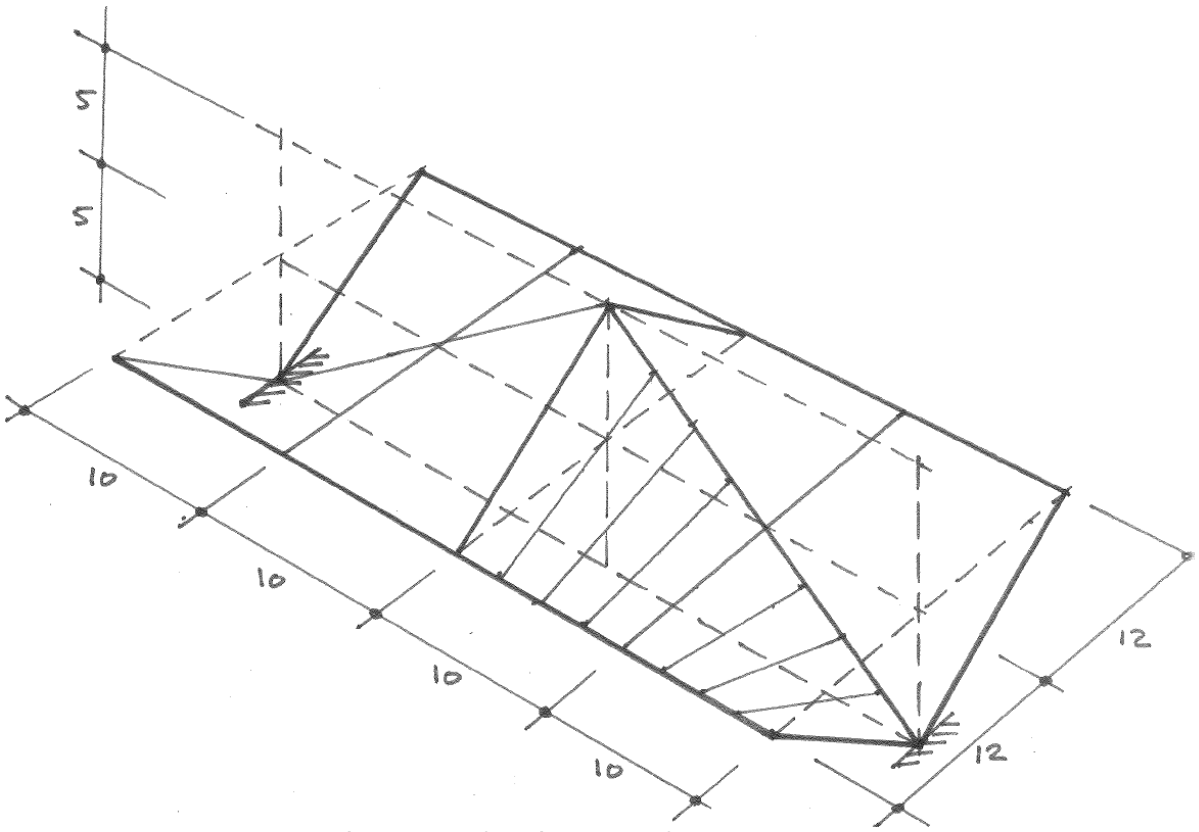

Figure 3. A four hypar roof

Problem 7 (18 minutes) 1 point

Design an assembly of hypar shells to be analysed in the next Shell exam (August 2014). It needs to be
1) different than in this exam and different than in the previous exams,
2) stable,
3) not extremely complicated.
You do not need to analyse this shell.